National Aeronautics and Space Administration

Langley Research Center

Hampton, Virginia 23681-2199

Cloud – Aerosol LIDAR Infrared Pathfinder Satellite Observations (CALIPSO)

Data Management System

Data Products Catalog

Document No: PC-SCI-503

Release 3.1

Cloud – Aerosol LIDAR Infrared Pathfinder Satellite Observations

Data Management System

Data Products Catalog

Release 3.1

Document No: PC-SCI-503

Primary Authors

Kathleen Powell, Mark Vaughan, David Winker,
Kam-Pui Lee, Michael Pitts, Charles Trepte
NASA Langley Research Center
Hampton, Virginia 23681

Pauline Detweiler, William Hunt, James Lambeth, Patricia Lucker, Timothy Murray
Science Systems and Applications Inc. (SSAI)
One Enterprise Parkway, Hampton, Virginia 23666

Olivier Hagolle, Anne Lifermann
CNES
31401 Toulouse Cedex 4 (France)

Michaël Faivre, Anne Garnier, Jacques Pelon
LATMOS/IPSL, Université Pierre et Marie Curie
75252 Paris Cedex 5 (France)

April 16, 2010

Cloud – Aerosol LIDAR Infrared Pathfinder Satellite Observations

Data Management System
Data Products Catalog

Document No: PC-SCI-503
April 16, 2010

SUBMITTED BY:

J. Chris Currey	Date
CALIPSO Data Manager	

APPROVED BY:

Thierry Tremas	Date
CALIPSO IIR Science Data Manager	

Dr. Jacques Pelon	Date
CALIPSO Co-Principal Investigator	

Dr. David M. Winker	Date
CALIPSO Principal Investigator	

Document Revision Record

The Document Revision Record below contains information pertaining to approved document changes. The table lists the date the change is issued, the Document Change Request (DCR) number, a short description of the revision, and the revised sections. The document authors are listed on the cover. The Head of the CALIPSO Data Management Team approves or disapproves the requested changes based on recommendations of the Configuration Management Board.

Table 0 - Document Revision Record

Issue Date	DCR1 Number	Description of Revision	Section Affected
03/13/2001		Initial draft document release for project review.	All
03/14/2003		Minor Updates to the Lidar Level 1B Data Product, to include several new parameters extracted from document DRD-14, Rev. A. Also moved the Lidar Housekeeping Record from the Lidar Level 1B Profile Product to the Lidar Calibration Product. Major updates to the Lidar Calibration Product based on input from the latest Lidar L1B ATBD and M. Osborne's Dec 2001 Calibration Data Product document. Major Updates to the Lidar Level 2 Data Products (DP 2.1A, DP 2.1B, DP 2.1C, and DP 2.1D) based on input from the CALIPSO Science Team. Updates to the IIR Level 1 Data Products to reflect new specifications provided in the latest CALIPSO Processing Requirements Document provided by CNES. Updates to the IIR Calibration Data Products to incorporate specific comments received from A. Lifermann. Also removed the Housekeeping Record until further requirements are defined. Updates to the IIR Level 2 Data Products based on input from A. Garnier. Updates to the WFC Level 1A and WFC Calibration Data Products based on the latest WFC ATBD and input from the CALIPSO Science Team. General revisions to include: 1) Changes to the daily and monthly product sizes in Table 1 and Table 2 due to extensive revisions to the Lidar Level 1 and Level 2 data products; 2) changes to the Level 0 Input Data Product Summary file sizes based on the most recent BATC DRD-14 document dated Aug. 29, 2002; 3) changes to the calibration product sizes due to a change in the time interval covered (from one orbit to 24 hours); and 4) the addition of underscores to all parameter names to be consistent with the appearance of the output from the CALIPSO Data Management software.	

Issue Date	DCR1 Number	Description of Revision	Section Affected
04/02/2003		Added A. Garnier to list of authors; updated date on IIR L2 Reference Document; added blind pixel image and note to the IIR L1 Calibration product; made extensive changes to the L4 Flux Science Record based on comments received from T. Charlock.	1.0, 2.10, 5.2
08/25/2004		Numerous formatting and organizational changes were made to improve the readability of the document; no DPC content changes were made.	All
08/31/2004	CCR #001	Meteorological profiles were added to the Lidar Level 1B Profile Products, and units were specified for all temporal and geophysical parameters.	1.0, 2.1
	CCR #002	The measurement altitudes were added to the metadata records associated with the Lidar Level 1B Profile Products, the Lidar Level 2 Aerosol Profile Products, and the Lidar Level 2 Cloud Profile Products.	1.0, 2.1, 2.5, 2.6
10/21/2004	CCR #003	The following fields were removed from the Lidar Level 2 Cloud and Aerosol Layer Products: • Column_Reflectance_1064 • Column_Reflectance_Uncertainty_1064 • Column_Reflectance_RMS_Variation_1064	2.0, 2.4
	CCR #004	The array size specified for the range resolved parameters included in the Lidar Level 2 Aerosol Profile Products was changed from 140 elements to 190 elements.	1.0, 2.5
12/08/2004	CCR #005	The following revisions were made to the Lidar Level 2 Cloud and Aerosol Layer Products: • the number of the tables describing the layer products was increased, and their structure slightly modified, in order to correctly reflect the CALIPSO data product distribution strategy (i.e., the layer products will be made available as four separate files) • the Viewing_Zenith_Angle and Viewing_Azimuth_Angle parameters were removed, and replaced with a single Off_Nadir_Angle parameter • units and ranges were specified for numerous parameters	1.0, 2.4
	CCR #006	The author list was updated, and several cosmetic repairs were made; no DPC content changes were made.	Pg ii, v
	CCR #007	The IIR Level 1B Radiances data product listing was updated consistent with changes made to the IIR Level 1 Requirements document.	1.0, 2.2, 2.8, 5.0, All
	CCR #008	The Wide Field Camera Level 1 Data Product was completely rewritten. All parameters previously reported as either pseudo-radiance or pseudo-reflectance are now being reported as, respectively, radiance and reflectance. In addition, the following tables were removed: • 1 km Registered Geolocation and Viewing Geometry • 125 m Native Geolocation and Viewing Geometry • 5 km Packet Record Several wide field camera raw data products were added to the Engineering Data Products section.	1.0, 2.3, 5.3, 5.4
	CCR #009	To make the DPC consistent with the specifications given in the SPIRS Input-Output Catalog, the IIR/Lidar Track Product was reorganized, and new content added as necessary.	1.0, 2.8, 2.9
	CCR #010	The longitude range in the WFC Level 1A 1 km Native Science Record was changed from –90°…90° to –180°…180°.	2.3
	CCR #011	Within the Lidar Level 2 Vertical Feature Mask Product (VFM), (a) revisions were made to the cloud types and stratospheric feature classifications reported, and (b) the number of feature subtype QA designations was reduced from 4 to 2. The latter change reduces the size of the VFM data product by approximately half.	1.0, 2.7
12/20/2004		Added updated Data flow Diagram; revised section numbering.	All

Issue Date	DCR1 Number	Description of Revision	Section Affected
01/06/2005	CCR #013	In section 2.3.1, the "WFC record summary" was expanded from a single table specifying a single WFC data product to three tables specifying three separate data products at different spatial resolutions.	1.0, 2.2, 2.8, 5.0, All
01/10/2005		Various formatting changes and improvements made throughout: acronyms and symbols tables updated.	All
03/03/2005	CCR #018	Remove remaining references to GLAS lidar ratio. Delete Table 39 and remove references to Table 39. Rename Table 37 to Best-estimate Lidar Ratio.	2.5
03/10/2005	CCR #020	Amend Tables 31 and 33 (5 km Column Descriptor Record: Clouds/Aerosols) to include feature-finder QC flag computed for each 5 km segment.	2.4
03/10/2005	CCR #021	Amend Tables 32 and 34 (5 km Layer Descriptor Records: Clouds/Aerosols) to include (a) the numerical result returned by the cloud-aerosol discrimination (CAD) algorithm, and (b) the extinction QC flag computed for each feature.	2.4
03/10/2005	CCR #022	Amend Table 32 (5 km Layer Descriptor Records: Clouds) to include the result returned by the cirrus cloud shape parameter algorithm.	2.4
05/18/2005	CCR #017	Amend Tables 10, 27, 29, and 31 (profile product and column descriptors) to include NSIDC map data.	2.1, 2.4
05/18/2005	CCR #023	Update the IGBP land cover description and legend.	4.6
05/20/2005	CCR #025	Updates to Lidar Tables 7 (remove unused calibration records), 9 (add off-nadir angle). Removed Table 63 (Lidar Daytime 1064 Calibration Record) and combined with Table 61 (Lidar 1064 Calibration Record (nighttime and daytime). Renumbered all Tables from 64 – 83, to 63 – 83. Updated the Lidar Calibration Product Tables (57 - 62) and Lidar Depolarization Gain Ratio Record Table (63).	2.1, 5.1 - 5.4, Appendix A
09/30/2005	CCR #026	Updated the references to coordinate and time formats throughout the entire catalog.	All
09/30/2005	CCR #027	Update the contents of the IIR level 1 data products. Major revisions included changing Int values to UInt, revising parameter names, and adding parameters. The tables revised include: Tables 67, 68, 69, 72, 73, and 74.	2.2, 5.2
09/30/2005	CCR #028	Updated WFC Tables 18, 19, and 21 to add total number of processes, and day/night packets; reflectance and solar zenith minimums and maximums (18), reordered parameters (19), added reflectance bins parameters (20 and 21). The summary Tables 15, 16, and 17 were updated to include changes above. Table 77, WFC Calibration Record, was reordered and 1 km and 125 m pixel value minimums and maximums were added. Table 75 was updated to include changes to Table 77.	2.3, 5.3
09/30/2005	CCR #029	Changed length of Date_Time_of_Production fields in Track and Swath products for consistency with other time fields (Tables 47, 50). Made editing changes to Tables 50 and 51.	2.8, 2.9
09/30/2005	CCR #030	Added Cal_Region_Top_Altitude_532 to Table 7. Added Spacecraft_Altitude to Table 8.	2.1
09/30/2005	CCR #031	Added aerosol data altitudes to "Lidar Aerosol Profile Metadata Record", Table 36. Update the number of elements per record for all atmospheric profile data (including altitude arrays) was changed from 190 elem/record to 199 elem/record. The number of bytes per record were updated to match the number of elements. Revised Tables 37 and 38.	2.5
09/30/2005	Edits only	Updated parameter names to match the production code. Revised Tables 26, 27, 28, 29, 30, 31, 32, 33, 34, and 43.	2.4, 2.7

Issue Date	DCR1 Number	Description of Revision	Section Affected
09/30/2005	CCR #032	Remove Table 64 (Lidar Instrument Settings Record) and Table 65 (Lidar Housekeeping Record). All table numbers in the following sections were updated. Listed here are old table numbers. Section 5.2 "IIR Calibration" (Tables 66-74), Section 5.3 "WFC Calibration" (Tables 75-77), Section 5.4 "WFC Raw Data" (Tables 78-80), and Appendix A (Table 81).	5.1, 5.2, 5.3, 5.4
09/30/2005	N/A	CALIOP Data Products Catalog Version 2.1, includes CCRs through #032.	All
02/22/2006	CCR #033	Version 2.2. 1. Changed all N/A under the Units Table entries to NoUnits for all Lidar and WFC tables. 2. Updated Reference Publication page to include latest project documentation numbers and titles for ATBDs. 3. Revised acronyms and symbols tables (added CAPS, DPC, and CALIOP, added volts). 4. Changed shots per second to 20.16 (from 20.25 – 2 places in document). 5. Updated Section 1.0 Introduction including text, Figure 1, and Tables 1, 4, and 5 to add DPC reference Tables. 6. Revised the conversion from bytes to Mbytes. Old conversion equation: 7. Mbytes = bytes/1000000. New conversion equation: Mbytes = bytes/1048576. Affects Tables 1-6, 11,15-17, 22-25, 35, 39, 42, 46, 49, 52, 57, 64, 73, and 76. 8. Section 2.0 Archival Data Products: a. added UTC CCSDS and TAI time parameter descriptions b. corrected the description of columns in the DPC Tables c. added the data file name category to data attributes (included data file name in every section) 9. Section 2.1 Lidar Level 1B Profiles DP 1.1: a. Revised Tables to match the HDF files. Revised Tables 7-10. 10. Section 2.4 Lidar Level 2 Cloud and Aerosol Layer Products DP 2.1A: a. Revised Tables to match the HDF files. Revised Tables 26, 28, 30, 31, 32, 33, 34. 11. Section 2.5 Lidar Level 2 Aerosol Profile Data Product DP 2.1B: a. Revised Tables to match the HDF files. Revised Tables 35, 36, 37, and 38. 12. Section 2.6 Lidar Level 2 Cloud Profile Data Product DP 2.1C: a. Revised Tables to match the HDF files. Revised Tables 40, 41, and 43. 13. Section 2.7 Lidar Level 2 Vertical Feature Mask Data Product DP 2.1D: a. Revised Tables to match the HDF files. Revised Table 44. 14. Section 5.1 Lidar Calibration: a. Revised Tables to match the HDF files. Removed parameters. Revised Tables 58-63. 15. Section 5.2.3 IIR Calibration Scientific Data Sets: a. Revised Table 72 to include a comma in the Bytes column data.	All
02/22/2006	CCR #034	1. Section 2.3.3 WFC Level 1 Scientific Data Sets: a. Added solar and viewing azimuth and zenith angle parameters, Table 20. 2. Section 5.3 WFC Calibration: a. Divided Table 75 into Table 75 and 76 for clarity of SDS parameters. This created a new Table 76. b. Renumbered old Tables 76 – 78. 3. Appendix A a. Renumbered Tables 79 and 80.	2.3.3, 5.3, Appendix A

Issue Date	DCR1 Number	Description of Revision	Section Affected
12/08/2006	CCR #035	Section 2.8 IIR/Lidar Track Product DP 2.2A Updated IIR Level 2 Tables 47, 48, 50, and 51 to include editing changes to Units and Range elements.	2.8
12/08/2006	CCR #036	Added UTC time to Tables 10, 13, 14, 19, 20, 21, 27, 29, 31, 33, 44, 59, 60, 61, 62, 63, 66, 67, 70, 71, 75, and 79.	2.1, 2.2, 2.3, 2.4, 2.7, 5.1, 5.2, 5.3
01/17/2007	CCR #037	Modified Lidar Level 2 data products to include an extinction QC flags at both 532 nm and 1064 nm	2.4
01/16/2007	CCR #038	Added Column Reflectances to the Lidar Level 1 Data Products	2.1
01/23/2007	CCR #039	Added relative humidity, surface wind speeds, and tropopause height and temperature to the Level 1 data products	2.1
01/16/2007	CCR #040	Added "Lidar Reflectance" (aka "lidar albedo") to the Lidar Level 2 Data Products	2.4
10/12/2007	CCR #041	Feature Finder Quality Flags, V02	2.4
10/04/2007	CCR #042	Data Products Catalog – updated document to make all sections consistent.	All
10/05/2007	CCR #043	Updated the contents of LIDAR Level 1B and calibration output files.	2.1
11/29/2007	CCR #044	Included GEOS-5 content into DPC with minor updates to document.	References, Acronyms, 4.3, Tables 7, 26, 36, 40, 43, 47, 50, 58
12/01/2007	CCR #045	Lidar Level 2 Data products additions for the Version 2.0 release.	Tables 26, and 37
12/01/2007	CCR #046	Added the Spacecraft_Position parameter allowing users to calculate the location of each sample when CALIPSO goes to a 3 degree pitch. This parameter was added to Tables: 27, 29, 31, 33, and 44.	2.4.3 and 2.7.3
		Data Products Catalog – Version 3.0	
10/01/2008	CCR #047	Added new Level 2 parameters, layer top pressure, layer base pressure, layer mid-point pressure, layer top temperature, and layer base temperature to Tables 28, 30, 32, and 34.	2.4.3
10/14/2008	CCR #048	Added new parameters to both the cloud (Tables 39 and 40) and aerosol (Tables 36 and 37) profile products. These include extinction QC flags, CAD scores, re-worked atmospheric volume description array, column optical depths for cloud, aerosol, and stratospheric layers, and intial lidar ratios for all cloud, aerosol, and stratospheric subtypes. Removed Table 38 "Lidar 40km Aerosol Profile Record, Fixed Lidar Ratio". Replaced Table 37 "Lidar 40 km Aerosol Profile Record, Best-estimage Lidar Ratio" with "Lidar 5 km Aerosol Profile Record, Best-estimage Lidar Ratio".	2.5 and 2.6
11/04/2008	CCR #049	Added the parameters, Orbit_Number_at_Granule_Start, Orbit_Number_at_Granule_End, Orbit_Number_Change_Time, Path_Number_at_Granule_Start, Path_Number_at_Granule_End, and Path_Number_Change_Time in file metadata record in Tables: 7, 12, 18, 26, 36, 39, 42, 46, 49, 52, 57, 64, 73, and 77.	2.1.2, 2.2.2, 2.3.2, 2.4.2, 2.5.2, 2.6.2, 2.7.2, 2.8.2, 2.9.2, 2.10, 5.1.2, 5.2.2, 5.3.2, and 5.4.2

Issue Date	DCR1 Number	Description of Revision	Section Affected
11/07/2008	CCR #050	Added "single shot cloud cleared fraction" to 5 km cloud and aerosol layer products to Tables 32 and 34.	2.4.3
11/06/2008	CCR #051	Added column optical depths to layer products to Tables 31 and 33.	2.4.3
11/14/2008	CCR #053	Added 1064 nm column optical depths to profile products to Tables 37 and 41.	2.5.3 and 2.7.1
11/07/2008	CCR #052	Deleted the "fixed lidar ratio" aerosol profile products from Table 38.	2.5.3
02/21/2009	CCR #056	The IGBP max value needed to be updated in Tables 10, 27, 29, 31, and 33. Updated link in section 4.6.	2.1.3, 2.4.3, and 4.6.
02/21/2009	CCR #054	Added an opacity flag to the 1/3 km and 1 km cloud layer products.	
04/20/2008	CCR #055	Removed fixed lidar ratio layer products in Table 33.	2.4.3
06/17/2009	Edits Only	Modified pages 6-7 such that the text in reflects the lidar level 1 version naming convention. Adjusted spacing for content to fit on one page.	2.0
08/04/2009	Edits Only	Corrected file name convention example. Activated Table of Contents to be linked to sections within the document.	1.0, TOC
		Data Products Catalog – Version 3.1	
09/17/2009	CCR #059	Added Rayleigh backscatter and extinction cross-sections and ozone absorption cross-sections to the lidar meta data included with the lidar data products to Tables 7, 36, and 39.	2.1.2, 2.5.2
04/08/2009	CCR #057	Updated Table 44 to indicate that the Ice/Water Phase type 3 (formerly "mixed phase") now indicates "oriented ice crystals."	2.7.3
10/28/2009	CCR #058	Replaced some of the TBDs and N/As in the range column for the following tables: 7 (Product_ID, Rayleigh_Extinction_Cross-section_532, Rayleigh_Extinction_Cross-section_1064, Rayleigh_Backscatter_Cross-section_532, Rayleigh_Backscatter_Cross-section_1064, Ozone_Absorption_Cross-section_532, and Ozone_Absorption_Cross-section_1064), 9 (Surface_Altitude_Shift, Number_Bins_Shift), 10 (Profile_ID, Land_Water_Mask, NSIDC_Surface_Type, Frame_Number, Lidar_Mode, Lidar_Submode, QC_Flag, QC_Flag_2), 12 (Product_ID), 18 (Product_ID), 26 (Product_ID), 36 (Product_ID, Rayleigh_Extinction_Cross-section_532, Rayleigh_Extinction_Cross-section_1064, Rayleigh_Backscatter_Cross-section_532, Rayleigh_Backscatter_Cross-section_1064, Ozone_Absorption_Cross-section_532, and Ozone_Absorption_Cross-section_1064), 39 (Product_ID, Rayleigh_Extinction_Cross-section_532, Rayleigh_Extinction_Cross-section_1064, Rayleigh_Backscatter_Cross-section_532, Rayleigh_Backscatter_Cross-section_1064, Ozone_Absorption_Cross-section_532, and Ozone_Absorption_Cross-section_1064), 42 (Product_ID), 46 (Product_ID), 49 (Product_ID), 57 (Product_ID), 64 (Product_ID), 77 (Product_ID), and 77 (Product_ID).	2.1.2, 2.1.3, 2.2.2, 2.3.2, 2.4.2, 2.5.2, 2.6.2, 2.7.2, 2.8.2, 2.9.2, 5.1.2, 5.2.2, 5.3.2, 5.4.2
11/10/2009	CCR #060	Added additional publications to the Reference section (item #19).	References
11/20/2009	CCR #061	Removed references subsystem 4.1. The entire section of 2.10 was removed from this version of the document. The CALIPSO team is not producing this product.	2.10
01/10/2010	CCR #062	Added 'layer base extended' information to the 5 km cloud and aerosol layer products.	2.4.3
01/10/2010	CCR #063	Added column optical depth uncertainties to all 5 km lidar level 2 data products.	2.4.3, 2.5.3, 2.6.3

Issue Date	DCR1 Number	Description of Revision	Section Affected
01/10/2010	CCR #064	Added classifier coefficients file information to metadata for all lidar level 2 data products.	2.4.2
01/11/2010	CCR #065	Modified the Primary Authors Page reflecting latest authors to this document.	Page ii
02/21/2010	CCR #066	Added the parameter, Day_Night_Flag to Tables 37 and 40.	2.5.3, 2.6.3
02/21/2010	CCR #067	Revised the reporting of Latitude, Longitude, TIA Time, and UTC Time in the Profile products.	2.6.3
02/16/2010	CCR #068	Added the CAD_Score parameter to the 1 km cloud layer product Table 30.	2.4.3
03/09/2010	CCR #069	Made major improvements to this document in support of the lidar level 2 Version 3.01 data release.	All

DOCUMENT REVISION RECORD ..... **IV**
REFERENCE DOCUMENTS ..... **XVII**
ACRONYMS ..... **XX**
SYMBOLS, SI UNITS ..... **XXI**
DATA TYPE ABBREVIATIONS ..... **XXII**
1.0 INTRODUCTION **1**
2.0 ARCHIVAL DATA PRODUCTS **7**
2.1 LIDAR LEVEL 1B PROFILES DP 1.1 9
2.1.1 LIDAR INSTRUMENT LEVEL 1 DATA PRODUCT 9
2.1.2 LIDAR INSTRUMENT LEVEL 1 DATA METADATA 10
2.1.3 LIDAR INSTRUMENT LEVEL 1 DATA SCIENTIFIC DATA SETS 11
2.2 IIR LEVEL 1B RADIANCES DP 1.2 14
2.2.1 INFRARED IMAGING RADIOMETER LEVEL 1 DATA PRODUCT 14
2.2.2 IIR LEVEL 1 METADATA 15
2.2.3 IIR LEVEL 1 SCIENTIFIC DATA SETS 17
2.3 WFC LEVEL 1B SCANS DP 1.3 19
2.3.1 WIDE FIELD CAMERA LEVEL 1 DATA PRODUCT 20
2.3.2 WFC LEVEL 1 DATA METADATA 21
2.3.3 WFC LEVEL 1 SCIENTIFIC DATA SETS 22
2.4 LIDAR LEVEL 2 CLOUD AND AEROSOL LAYER PRODUCTS DP 2.1A 24
2.4.1 LIDAR LEVEL 2 CLOUD AND AEROSOL LAYERS RECORD SUMMARY 25
2.4.2 LIDAR CLOUD & AEROSOL LEVEL 2 METADATA 26
2.4.3 LIDAR CLOUD & AEROSOL LEVEL 2 SCIENTIFIC DATA SETS 27
2.5 LIDAR LEVEL 2 AEROSOL PROFILE DATA PRODUCT DP 2.1B 36
2.5.1 LIDAR LEVEL 2 AEROSOL PROFILE DATA SUMMARY 37
2.5.2 LIDAR AEROSOL PROFILE DATA METADATA 37
2.5.3 LIDAR AEROSOL PROFILE DATA SCIENTIFIC DATA SETS 39
2.6 LIDAR LEVEL 2 CLOUD PROFILE DATA PRODUCT DP 2.1C 41
2.6.1 LIDAR CLOUD PROFILE DATA RECORD SUMMARY 42
2.6.2 LIDAR CLOUD PROFILE DATA METADATA 42
2.6.3 LIDAR CLOUD PROFILE SCIENTIFIC DATA SETS 44
2.7 LIDAR LEVEL 2 VERTICAL FEATURE MASK DATA PRODUCT DP 2.1D 46
2.7.1 LIDAR VERTICAL FEATURE MASK DATA RECORD SUMMARY 47
2.7.2 LIDAR VERTICAL FEATURE MASK METADATA 47
2.7.3 LIDAR VERTICAL FEATURE MASK SCIENTIFIC DATA SETS 48

2.8 IIR/LIDAR TRACK PRODUCT DP 2.2A 50
2.8.1 IIR/LIDAR TRACK PRODUCT 50
2.8.2 IIR/LIDAR TRACK METADATA 51
2.8.3 IIR/LIDAR TRACK SCIENTIFIC DATA SETS 52
2.9 IIR LEVEL 2 SWATH PRODUCT DP 2.2B 54
2.9.1 IIR LEVEL 2 SWATH PRODUCT 54
2.9.2 IIR SWATH METADATA 55
2.9.3 IIR SWATH SCIENTIFIC DATA SETS 56
3.0 LEVEL 0 INPUT DATA PRODUCTS 58
3.1 LIDAR LEVEL 0 DATA 58
3.2 IMAGING INFRARED RADIOMETER LEVEL 0 DATA 59
3.3 WIDE FIELD CAMERA LEVEL 0 DATA 59
4.0 ANCILLARY INPUT DATA PRODUCTS 60
4.1 EPHEMERIS DATA 61
4.2 ATTITUDE DATA 61
4.3 GLOBAL MODELING AND ASSIMILATION OFFICE (GMAO) 61
4.4 SDP TOOLKIT DIGITAL ELEVATION MODEL (DEM) 61
4.5 SDP TOOLKIT LAND AND WATER COVERAGE 62
4.6 INTERNATIONAL GEOSPHERE BIOSPHERE PROGRAMME (IGBP) ECOSYSTEM 62
4.7 NATIONAL SNOW AND ICE DATA CENTER (NSIDC) MAP 63
5.0 ENGINEERING DATA PRODUCTS 65
5.1 LIDAR CALIBRATION 65
5.1.1 LIDAR CALIBRATION PRODUCT 66
5.1.2 LIDAR CALIBRATION METADATA 67
5.1.3 LIDAR CALIBRATION SCIENTIFIC DATA SETS 68
5.2 IIR CALIBRATION 73
5.2.1 IIR CALIBRATION RECORD SUMMARY 73
5.2.2 IIR CALIBRATION METADATA 74
5.2.3 IIR CALIBRATION SCIENTIFIC DATA SETS 75
5.3 WFC CALIBRATION 79
5.3.1 WFC CALIBRATION DATA PRODUCT 79
5.3.2 WFC CALIBRATION METADATA 80
5.3.3 WFC CALIBRATION SCIENTIFIC DATA SETS 80
5.4 WFC RAW DATA 82
5.4.1 WFC RAW DATA PRODUCT 82

5.4.2 WFC RAW DATA METADATA 83
5.4.3 WFC RAW DATA SCIENTIFIC DATA SETS 83
APPENDIX A 85

List of Figures

Figure 1: CALIPSO Top Level Data Flow Diagram 2

List of Tables

Table 1: CALIPSO Science Archival Data Product Summary 5
Table 2: CALIPSO Level 0 Input Data Product Summary 6
Table 3: CALIPSO Ancillary Input Data Product Summary 6
Table 4: CALIPSO Engineering Data Product Summary 6
Table 5: CALIPSO DMS Total 6
Table 6: Lidar Instrument Record Summary 9
Table 7: Lidar Metadata Record 10
Table 8: Lidar Spacecraft Position, Attitude, and Celestial Record 11
Table 9: Lidar Profile Geolocation and Viewing Geometry 11
Table 10: Lidar Profile Science Record 12
Table 11: IIR Record Summary 14
Table 12: IIR Level 1 Metadata Record 15
Table 13: IIR Spacecraft Position, Attitude, and Celestial Record (1 per Earth view) 17
Table 14: Earth View Record (1 per grid line) 18
Table 15: WFC Record Summary - 1 km Registered Science 20
Table 16: WFC Record Summary - 1 km Native Science 20
Table 17: WFC Record Summary - 125 m Native Science 20
Table 18: WFC Level 1 Metadata Record 21
Table 19: 1 km Registered Science Record 22
Table 20: 1 km Native Science Record 22
Table 21: 125 m Native Science Record 23
Table 22: 1/3 km Lidar Cloud Layer Record Summary 25
Table 23: 1 km Lidar Cloud Layer Record Summary 25
Table 24: 5 km Lidar Cloud Layer Record Summary 25
Table 25: 5 km Lidar Aerosol Layer Record Summary 25
Table 26: Lidar Cloud & Aerosol Level 2 Layer Metadata Record 26
Table 27: Lidar 1/3 km Column Descriptor Record: Clouds 27
Table 28: Lidar 1/3 km Layer Descriptor Record: Clouds 28
Table 29: Lidar 1 km Column Descriptor Record: Clouds 29
Table 30: Lidar 1 km Layer Descriptor Record: Clouds 29
Table 31: Lidar 5 km Column Descriptor Record: Clouds 30

Table 32: Lidar 5 km Layer Descriptor Record: Clouds 32
Table 33: Lidar 5 km Column Descriptor Record: Aerosols 33
Table 34: Lidar 5 km Layer Descriptor Record: Aerosols 34
Table 35: Lidar Level 2 Aerosol Profile Data Record Summary 37
Table 36: Lidar Level 2 Aerosol Profile Metadata Record 37
Table 37: Lidar 5 km Aerosol Profile Record 39
Table 38: Lidar Cloud Profile Data Record Summary 42
Table 39: Lidar Cloud Profile Metadata Record 42
Table 40: Lidar 5 km Cloud Profile Record 44
Table 41: Lidar Vertical Feature Mask Data Record Summary 47
Table 42: Lidar Vertical Feature Mask Metadata Record 47
Table 43: Lidar Vertical Feature Mask Record 48
Table 44: Feature Classification Flag Definition 48
Table 45: IIR/Lidar Track Product Summary 50
Table 46: IIR/Lidar Track Metadata Record 51
Table 47: IIR/Lidar Track Science Record 52
Table 48: IIR Swath Product Summary 54
Table 49: IIR Swath Product Metadata Record 55
Table 50: IIR Swath Product Science Record 56
Table 51: On-orbit Lidar Profile Horizontal and Vertical Averaging for 532 nm 58
Table 52: On-orbit Lidar Profile Horizontal and Vertical Averaging for 1064 nm 58
Table 53: Lidar Calibration Product Summary 66
Table 54: Lidar Calibration Metadata Record 67
Table 55: Lidar Nighttime Segment Summary Record (One per orbit) 68
Table 56: Lidar Nighttime 532 Calibration Record 70
Table 57: Lidar 1064 Calibration Record (nighttime and daytime) 71
Table 58: Lidar Daytime Segment Summary Record (One per orbit) 71
Table 59: Lidar Depolarization Gain Ratio Record 72
Table 60: IIR Calibration Record Summary for one orbit 73
Table 61: IIR Calibration Metadata Record 74
Table 62: IIR Space View Record 75
Table 63: IIR Blackbody Record 75
Table 64: IIR Dead Pixel Image 76
Table 65: IIR Blind Pixel Image 76
Table 66: IIR Equalization Image 77
Table 67: IIR Test Image 77
Table 68: Earth Averaging Record (1 half per orbit) 78
Table 69: WFC Calibration Record Summary 79

Table 70: WFC Calibration Metadata Record 80
Table 71: WFC Calibration Record 80
Table 72: WFC Calibration Statistic Record 81
Table 73: WFC Raw Data Record Summary 82
Table 74: WFC Raw Data Metadata Record 83
Table 75: WFC Raw Data Record 83
Table 76: Core Metadata Record Vdata 85
Table 77: Archive Metadata Record Vdata 85

Reference Documents

The documents listed in this section contain information that was used to develop this document and/or information that provides additional reference material that may be useful for a complete understanding of the CALIPSO data products.

Data products are released by version. In support of the different versions, quality summaries are written explaining the detailed information supporting the parameters. Quality summaries are available at the Atmospheric Science Data Center, http://eosweb.larc.nasa.gov/PRODOCS/calipso/table_calipso.html.

1. CALIOP Lidar Level I Algorithm Theoretical Basis Document Calibration and Level 1 Data Products (PC-SCI-201), Release 1.0, 27 April, 2006.
2. CALIOP Lidar Level II Algorithm Theoretical Basis Document, Part 1 Mission, Instrument, and Algorithms Overview (PC-SCI-202.01).
3. CALIOP Lidar Level II Algorithm Theoretical Basis Document, Part 2 Feature Detection and Layer Properties Algorithms (PC-SCI-202.02), Release 1.01, 27 September, 2005.
4. CALIOP Lidar Level II Algorithm Theoretical Basis Document, Part 3 Scene Classification Algorithms (PC-SCI-202.03), Release 1.0, 18 October, 2005.
5. CALIOP Lidar Level II Algorithm Theoretical Basis Document, Part 4 Extinction Retrieval and Particulate Property Algorithms (PC-SCI-202.04) (draft).
6. CALIPSO Algorithm Theoretical Basis Document, Wide Field Camera (WFC) Level 1 Algorithms (PC-SCI-205), Release 1.0, 25 October, 2005.
7. IIR Level I Processing Requirements, CNES, Ed. 2, 22 March, 2002.
8. IIR Level I Algorithm Theoretical Basis Document (PC-SCI-203), Version 2.0, IPSL, (draft), January, 2002.
9. Draft Description of SPIRS, Second Level Processing of Infrared Radiometer Simulations, December, 2000.
10. Draft Second Level Processing of Infrared Radiometer Simulation (SPIRS) Input/Output Catalog, Laboratoire de Meteorologie Dynamique, Ecole Polytechnique, Version 1, July, 2001.
11. Release 5A SDP Toolkit Users Guide, ECS 333-CD-500-001, June, 1999.
12. 184-TP-001-002 Terra Spacecraft Ephemeris & Attitude Data Preprocessing, Technical Paper, June, 2001.
13. DRD-14 (Rev F) CALIPSO Payload Data Measurements & Analysis Document, Contract NASA-99135, 10 December, 2003.
14. CALIPSO Data Management System Data Management Plan, (PC-SCI-502), NASA, February, 2001.

15. The International System of Units (SI), Ed. by Barry N. Taylor, National Institute of Standards and Technology Special Publication 330 2001 Edition (U.S. Government Printing Office, Washington: 2001).

16. Consultative Committee for Space Data Systems (CCSDS) Recommendation for Space Data System Standards: Time Code Formats, Issue 2, 301.0-B-2, April, 1990.

17. HDF Users Guide Version 4.1r3, National Center for Supercomputing Applications, University of Illinois at Urbana-Champaign, January, 1995.

18. GMAO-1001v6.1, File Specification for GEOS-5 DAS Gridded Output, 24 October, 2006.

19. Winker, D. M., J. Pelon, J. A. Coakley, Jr., S. A. Ackerman, R. J. Charlson, P. R. Colarco, P. Flamant, Q. Fu, R. Hoff, C. Kittaka, T. L. Kubar, H. LeTreut, M. P. McCormick, G. Megie, L. Poole, K. Powell, C. Trepte, M. A. Vaughan, B. A. Wielicki, 2009: "The CALIPSO Mission: A Global 3D View Of Aerosols And Clouds", accepted to Bull. Am. Meteorol. Soc.

20. The following publications are available through the American Meteorological Society on-line portal at http://www.ametsoc.org/. The journal name is Journal of Atmospheric and Oceanic Technology.

Hu, Y., D. Winker, M. Vaughan, B. Lin, A. Omar, C. Trepte, D. Flittner, P. Yang, W. Sun, Z. Liu, Z. Wang, S. Young, K. Stamnes, J. Huang, R. Kuehn, B. Baum and R. Holz, 2009: "CALIPSO/CALIOP Cloud Phase Discrimination Algorithm", J. Atmos. Oceanic Technol., **26**, 2293–2309, doi:10.1175/2009JTECHA1280.1.

Hunt, W. H, D. M. Winker, M. A. Vaughan, K. A. Powell, P. L. Lucker, and C. Weimer, 2009: "CALIPSO Lidar Description and Performance Assessment", *J. Atmos. Oceanic Technol.*, **26**, 1214–1228, doi:10.1175/2009JTECHA1223.1.

Liu, Z., M. A. Vaughan, D. M. Winker, C. Kittaka, R. E. Kuehn, B. J. Getzewich, C. R. Trepte, and C. A. Hostetler, 2009: "The CALIPSO Lidar Cloud and Aerosol Discrimination: Version 2 Algorithm and Initial Assessment of Performance", *J. Atmos. Oceanic Technol*., **26**, 1198-1213, doi:10.1175/2009JTECHA1229.1.

Omar, A., D. Winker, C. Kittaka, M. Vaughan, Z. Liu, Y. Hu, C. Trepte, R. Rogers, R. Ferrare, R. Kuehn, C. Hostetler, 2009: "The CALIPSO Automated Aerosol Classification and Lidar Ratio Selection Algorithm", *J. Atmos. Oceanic Technol*., **26**, 1994-2014, doi:10.1175/2009-JTECHA1231.1.

Powell, K. A., C. A. Hostetler, Z. Liu, M. A. Vaughan, R. E. Kuehn, W. H. Hunt, K. Lee, C. R. Trepte, R. R. Rogers, S. A. Young, and D. M. Winker, 2009: "CALIPSO Lidar Calibration Algorithms: Part I - Nighttime 532 nm Parallel Channel and 532 nm Perpendicular Channel", *J. Atmos. Oceanic Technol*., **26**, 2015–2033, doi:10.1175/2009-JTECHA1242.1.

Vaughan, M., K. Powell, R. Kuehn, S. Young, D. Winker, C. Hostetler, W. Hunt, Z. Liu, M. McGill, B. Getzewich, 2009: "Fully Automated Detection of Cloud and Aerosol Layers in the CALIPSO Lidar Measurements", *J. Atmos. Oceanic Technol*., **26**, 2034-2050, doi: 10.1175/2009JTECHA1228.1.

Winker, D. M., M. A. Vaughan, A. H. Omar, Y. Hu, K. A. Powell, Z. Liu, W. H. Hunt, and S. A. Young, 2009: "Overview of the CALIPSO Mission and CALIOP Data Processing Algorithms", *J. Atmos. Oceanic Technol*., **26**, 2310-2323, doi:10.1175/ 2009JTECHA1281.1.

Acronyms

ASDC	Atmospheric Science Data Center
ATBD	Algorithm Theoretical Basis Document
BATC	Ball Aerospace and Technologies Corporation
CALIOP	Cloud-Aerosol Lidar with Orthogonal Polarization
CALIPSO	Cloud-Aerosol Lidar and Infrared Pathfinder Satellite Observations
CAPS	CALIPSO Automated Processing System
CCD	Charge Coupled Device
CCR	Configuration Change Request
CCSDS	Consultative Committee for Spacecraft Data Systems
CERES	Clouds and the Earth's Radiant Energy System
CNES	Centre National D'Etudes Spatiales
CRS	CERES Clouds and Radiative Swath Data Product
DPC	Data Products Catalog
DPREP	Data Pre-processing
DCR	Document Change Request
DEM	Digital Elevation Models
DMS	Data Management System
DMSP	Defense Meteorological Satellite Program
DRD	Data Requirements Description
ECI	Earth Centered Inertial
ECR	Earth Centered Rotation
ECS	EOSDIS Core System
EOS	Earth Observing Systems
EOSDIS	Earth Observing System Data and Information System
EROS	Earth Resources Observation System
GMAO	Global Modeling and Assimilation Office
GMT	Greenwich Mean Time
HDF	Hierarchical Data Format
HU	Hampton University
ICD	Interface Control Document
IFOV	Instantaneous Field of View
IGBP	International Geosphere Biosphere Programme
IIR	Imaging Infrared Radiometer
IPSL	Institut Pierre Simon Laplace
LaRC	Langley Research Center
LATIS	Langley TRMM and Terra Information System
MET	Meteorological Data
MOCC	Mission Operations Control Center
N/A	Not Applicable, Not Available
NISE	Near Real-Time Ice and Snow Extent
NSIDC	National Snow and Ice Data Center
PDDS	Payload Data Delivery System

Acronyms

PGE	Program Generation Executable
SDP	Science Data Production
SDS	Scientific Data Set
SI	System International of Units
SSAI	Science Systems and Applications Inc.
SSM/I	Special Sensor Microwave/Imager
TAI	International Atomic Time
TBD	To Be Determined
TRMM	Tropical Rainfall Measuring Mission
UNL	University of Nebraska-Lincoln
USGS	U.S. Geological Survey
UTC	Universal Time Conversion
VFM	Vertical Feature Mask
WFC	Wide Field Camera

Symbols, SI Units

AU	astronomical unit
deg	degree
°C	degree Celsius
J	joule
K	kelvin
km	kilometer
m	meter
mb	millibar
ms	millisecond
nm	nanometer
Pa	pascal
per, %	percent
s, sec	second
sr	steradian
V	volt
W	watt
μm	micron, micrometer

Data Type Abbreviations

Char	Character, 8 bits or 1 byte
Float_32	Floating point, 32 bits or 4 bytes
Float_64	Floating point, 64 bits or 8 bytes
Int_8	Integer, 8 bits or 1 byte
Int_16	Integer, 16 bits or 2 bytes
Int_32	Integer, 32 bits or 4 bytes
MB	Mbytes, megabytes, bytes/1024^2
UInt_8	Unsigned integer, 8 bits or 1 byte
UInt_16	Unsigned integer, 16 bits or 2 bytes
UInt_32	Unsigned integer, 32 bits or 4 bytes

1.0 Introduction

The Cloud–Aerosol Lidar and Infrared Pathfinder Satellite Observation (CALIPSO) mission is a continuing collaboration effort between the NASA Langley Research Center (LaRC) and the Centre National D'Etudes Spatiales (CNES) to study global radiative effects of aerosols and clouds on climate. Since its launch on April 28, 2006, CALIPSO has been providing nearly continuous measurements of the vertical structure and optical properties of clouds and aerosols to improve our understanding of their role in the Earth's climate system and to improve the performance of a variety of models ranging from regional chemical transport to global circulation models us ed for climate prediction (Winker et al., 2010).

The CALIPSO payload consists of three co-aligned, near-nadir viewing instruments: a 2-wavelength polarization-sensitive lidar, an imaging infrared radiometer (IIR), and a high-resolution wide field camera (WFC). CALIOP is the name of the CALIPSO lidar and is an acronym for *Cloud-Aerosol Lidar with Orthogonal Polarization*. The lidar profiles provide information on the vertical distribution of aerosols and clouds, cloud particle phase, and classification of aerosol size. The CALIOP laser transmitter subsystem transmits laser light simultaneously at 532 nm and 1064 nm at a pulse repetition rate of 20.16 Hz. The CALIOP receiver subsystem measures backscatter intensity at 1064 nm and at two orthogonally polarized components of the 532 nm backscattered signal.

The IIR provides medium spatial resolution nadir viewing images at 8.65, 10.6, and 12.05 μm, providing information on cirrus cloud particle size and infrared emissivity. The WFC digital camera collects daytime high spatial resolution imagery in the 620 - 670 nm wavelength range and is used to ascertain cloud homogeneity, aid in cloud clearing, and provide meteorological context.

CALIPSO orbits in formation with other spacecraft in the A-Train satellite constellation, and provides complementary, near-simultanious, observations with the other active and passive instruments in the constellation to better understand the effects of clouds and aerosols on climate, weather, and air quality.

The Data Management System (DMS) uses the CALIPSO Automated Processing System (CAPS) to convert the CALIPSO instrument data into scientific data products. A high level view of the CALIPSO DMS is illustrated in the Top Level Data Flow Diagram shown in Figure 1. The data flow diagram depicts the relationship between the data products and the subsystems that produce them. Circles in the diagram represent algorithm processes called subsystems. Subsystems are a logical collection of algorithms, which together convert input data products into output data products. Boxes with arrows entering a circle are input data sources for the subsystem, while boxes with arrows exiting the circles are output data products.

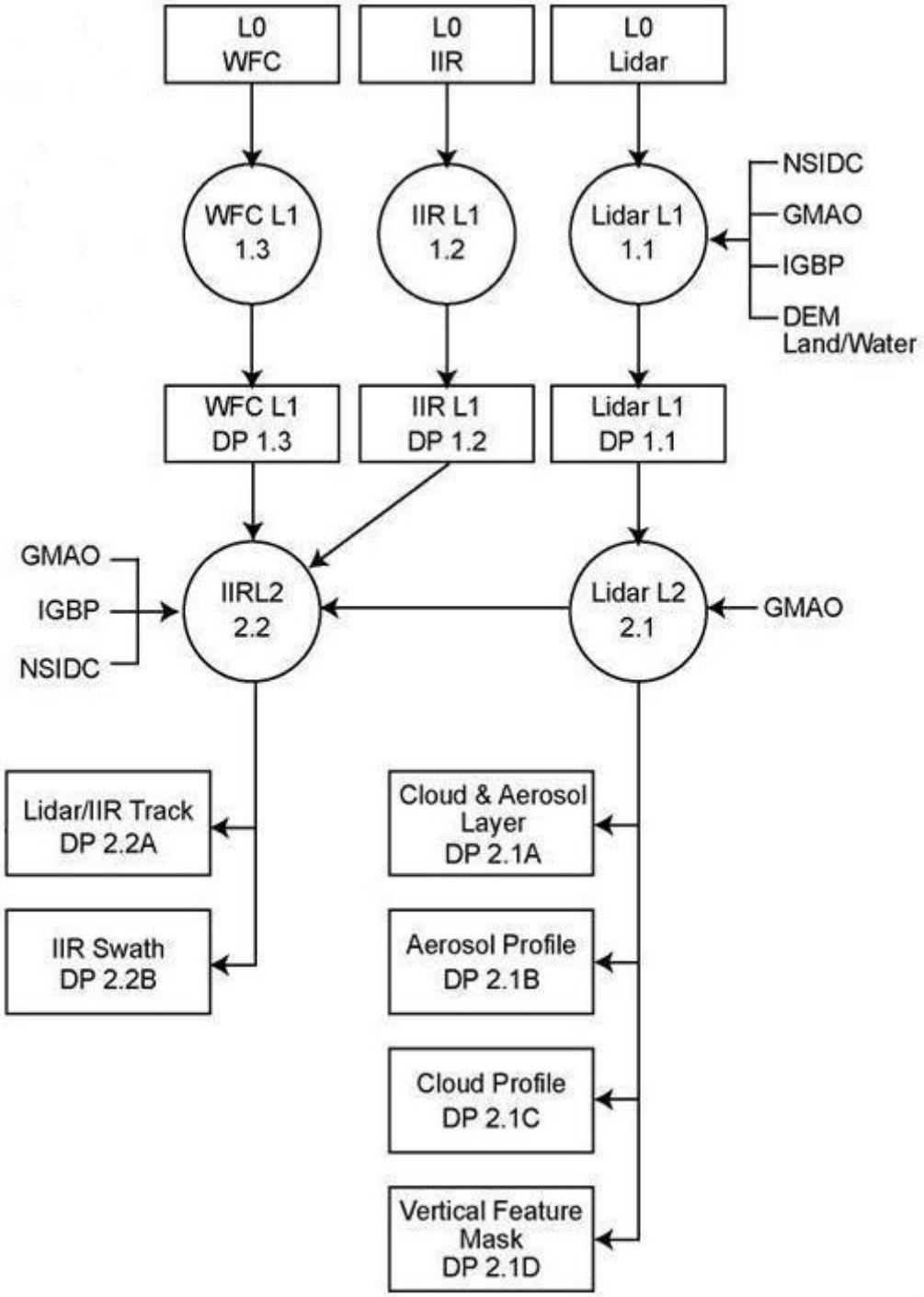

Figure 1: CALIPSO Top Level Data Flow Diagram

NOTE: The numbers in the circles represent production subsystems. The numbers prefixed with DP (Data Product) are sections identified in this document.

The CALIPSO Data Products Catalog (DPC) is intended to provide an overview of the data products that are used or produced by the Data Management System. The LaRC Atmospheric Science Data Center (ASDC) processes, archives, and disseminates the CALIPSO data products in Hierarchical Data Format (HDF) to the scientific community. The emphasis in this document is on the external interfaces with the LaRC ASDC for standard science data processing. Additional updates will be made as the product definitions mature.

Data are released by version. In support of the different versions, quality summaries are written explaining the detailed information supporting the parameters. Quality summaries are available on the Atmospheric Science Data Center's web site, http://eosweb.larc.nasa.gov/PRODOCS/calipso/table_calipso.html.

The CALIPSO data product naming convention is defined as:

[Investigation]_[Subsystem]_[Level]_[ProductID]-[ProductionStrategy]-[Version].[Instance].hdf

where

Investigation	= Mission Name, CAL
Subsystem	= [LID|IIR|WFC]
Level	= Product Level, e.g., L0, L1, L2, or L3
ProductID	= Product Identification, [CAL, IIR, 1Km, 125m, 333mCLay, 01kmCLay, 05kmCLay, 05kmALay, 5kmAProCal, 05kmCPro, VFM]
ProductionStrategy	= Provided to CAPS by PGE basis to identify the type of run.
Version	= Version information, e.g., V3.01
Instance	= YYYY-MM-DDThh-mm-ssZ[D|N]

For example, the file named CAL_LID_L1-ValStage1-V3-01.2007-05-01T01-20-09ZN.hdf would contain the following:

- Investigation: CAL (CALIPSO mission),
- Subsystem: LID (Lidar (Lidar 1.1)),
- Level: L1,
- Production Strategy or Release named: ValStage1,
    - Quality designators indicate the maturity of products and individual parameters, and include "Beta", "Provisional", "Validated Stage 1", "Validated Stage 2", and "Validated Stage 3". A product may contain parameters at varying quality levels.

Beta:	Early release products for users to gain familiarity with data formats and parameters.
Provisional:	Limited comparisons with independent sources have been made

	and obvious artifacts fixed.
Validated Stage 1:	Uncertainties are estimated from independent measurements at selected locations and times.
Validated Stage 2:	Uncertainties are estimated from more widely distributed independent measurements.
Validated Stage 3:	Uncertainties are estimated from independent measurements representing global conditions.

- Version: V3-01,
- Instance:
    - Date 1 May, 2007 (data measurement date), (2007-05-01)
    - Time of first record: 1 hour, 20 minutes, 9 seconds (T01-20-09)
    - Nighttime conditions (N)

The data product version information is defined using the X.YY format, where

X – Major Release Number
- tracks a major software release

YY – Minor Release Number
- tracks a minor software release, e.g., change in GMAO data version, code or algorithm updates

There are four categories of products and they are listed in Table 1 through Table 4. These categories are described in the following summary.

Table 1: Science Archival Data Products: Output products, permanently stored by the LaRC ASDC, formatted in HDF, and available for distribution to the scientific community.

Table 2: Level 0 Products: Input payload products, permanently stored by the LaRC ASDC, and not available for distribution.

Table 3: Ancillary Products: Input products, permanently stored by the LaRC ASDC, needed to interpret the payload measurements, and not available for distribution.

Table 4: Engineering Products: Output products, permanently stored by the LaRC ASDC, required determining the health and calibration of the instruments and not routinely available for distribution.

The tables list the subsystems that produce or use the data products; a descriptive data product name, the product spatial and temporal coverage; the file size; and the total daily and monthly data volumes. The data products that have parameters fully described in subsequent sections of this document have their corresponding DPC Table Number Reference listed parenthetically to the right of the data product name. The monthly size is based on 30 days.

Table 1: CALIPSO Science Archival Data Product Summary

Sub-system	Product (DPC Reference Table(s))	Spatial Coverage	Temporal Coverage (hrs.)	File Size (MB)	Daily Size (MB)	Monthly Size (MB)
1.1	Lidar Level 1 – Day (6)	Profile	0.83	472.72	6,875.74	206,272.24
1.1	Lidar Level 1 – Night (6)	Profile	0.83	472.72	6,875.74	206,272.24
1.2	IIR Level 1 – Day (11)	Swath	0.83	48.85	710.51	21,315.39
1.2	IIR Level 1 – Night (11)	Swath	0.83	48.85	710.51	21,315.39
1.3	WFC Level 1 – Day Only (15-17)	Swath	0.83	216.95	3,169.39	95,081.61
2.1	Lidar Cloud and Aerosol Layer – Day (22-25)	Profile	0.83	111.00	1,368.24	41,047.18
2.1	Lidar Cloud and Aerosol Layer – Night (22-25)	Profile	0.83	111.00	1,368.24	41,047.18
2.1	Lidar Aerosol Profile – Day (35)	Profile	0.83	136.25	1,981.80	59,454.00
2.1	Lidar Aerosol Profile – Night (35)	Profile	0.83	136.25	1,981.80	59,454.00
2.1	Lidar Cloud Profile – Day (38)	Profile	0.83	96.76	1,407.42	42,222.54
2.1	Lidar Cloud Profile – Night (38)	Profile	0.83	96.76	1,407.42	42,222.54
2.1	Lidar Vertical Feature Mask – Day (41)	Profile	0.83	42.40	616.69	18,500.80
2.1	Lidar Vertical Feature Mask – Night (41)	Profile	0.83	42.40	616.69	18,500.80
2.2	IIR/Lidar Track – Day (45)	Track	0.83	4.21	61.19	1,835.72
2.2	IIR/Lidar Track – Night (45)	Track	0.83	4.21	61.19	1,835.72
2.2	IIR Swath – Day (48)	Swath	0.83	112.29	1,633.24	48,997.31
2.2	IIR Swath – Night (48)	Swath	0.83	112.29	1,633.24	48,997.31
	File, Daily, and Monthly Totals			**2,265.91**	**32,479.05**	**974,371.97**

Table 2: CALIPSO Level 0 Input Data Product Summary

Sub-system	Product	Spatial Coverage	Temporal Coverage (hrs)	Product Size (MB)	Daily Size (MB)	Monthly Size (MB)
1.1	Lidar Level 0	Profile	1.65 (1 orbit)	157.85	2295.94	68878.32
1.2	IIR Level 0	Swath	1.65 (1 orbit)	66.15	962.12	28863.69
1.3	WFC Level 0	Swath	1.65 (1 orbit)	15.36	223.39	6701.75
	Daily and Monthly Totals			**239.36**	**3,481.45**	**104,443.76**

Table 3: CALIPSO Ancillary Input Data Product Summary

Sub-system	Product	Spatial Coverage	Temporal Coverage	Product Size (MB)	Daily Size (MB)	Monthly Size (MB)
0.2	Ephemeris	N/A	Daily	0.50	0.50	15.00
0.1	L0 Attitude	N/A	Daily	5.53	5.53	165.90
0.1	L0 GPS	N/A	Daily	4.84	4.84	145.20
1.1,2.1, 2.2	Daily GMAO	Global	Daily	220.70	220.70	6621.00
2.2	IGBP Ecosystem	Global	Static	933.12	933.12	933.12
1.1,1.3	DEM	Global	Static	20544	20544	20544.00
2.2	NSIDC Snow/Ice	Global	Daily	2.30	2.30	69.00
1.1-1.3	Land/Water Coverage[1]	Global	Static	N/A	N/A	N/A
	Dynamic Daily and Monthly Totals			**21,710.99**	**21,710.99**	**28,493.22**

1) Land/Water Coverage part of Toolkit DEM; sizes already included

Table 4: CALIPSO Engineering Data Product Summary

Sub-system	Product (DPC Reference Table(s))	Spatial Coverage	Temporal Coverage	Product Size (MB)	Daily Size (MB)	Monthly Size (MB)
1.1	Lidar Calibration (56)	N/A	24 Hours	6.11	6.11	183.3
1.2	IIR Calibration (63)	N/A	Per Orbit	24.15	351.29	10,538.73
1.3	WFC Calibration (72)	N/A	24 Hours	6.36	6.36	2,773.88
1.3	WFC Raw Data (76)	N/A	variable	0.01	N/A	N/A
	Daily and Monthly Totals			**36.63**	**363.76**	**13,495.91**

Table 5: CALIPSO DMS Total

Product Category	Reference Table	Daily Size (MB)	Monthly Size (MB)
Science	1	30,112.22	859,365.50
Level 0	2	3,481.45	104,443.76
Ancillary	3	21,710.99	28,493.22
Engineering	4	363.76	13,495.91
Daily and Monthly Totals		**55,668.42**	**1,005,798.39**

2.0 Archival Data Products

This section describes the CALIPSO data products, which are permanently archived at the Langley ASDC. Each data product is a single file in HDF format. Each subsection contains a brief overview of the purpose and content of the data product followed by one or more tables listing every parameter contained in the product. The following data attributes are described in the overview sections:

- Level – Data product levels are defined using EOS definitions[1]
- Type – Data type (Science Archival, Level 0, Ancillary, or Engineering)
- Frequency – How often the product is received or produced
- Time interval Covered
    - File – Time period covered within this file
- Spatial resolution
    - Record – Vertical and horizontal coverage
- File Name(s) – The name of the data product (Listed with Production Strategy, Version, and Instance)

Additional tables contain the following attributes for each parameter:

- Parameter Name – Name of parameter
- Data Type – Data type definition of the parameter value
- Units – Units of the parameter value
- Range – Range of values for the parameter (Note: For many parameters, "Range" indicates the nominal range physically meaningful values. Some small fraction of values may fall outside this range due to noise. Check the associated Uncertainty and QA parameters for guidance on data quality.)
- Elements/Record – elements per record for this parameter

Total file sizes also are provided.

---

1) **Level 0**: Reconstructed unprocessed instrument/payload data at full resolution; any and all communications artifacts (e.g. synchronization frames, communications headers) removed.

Level 1A: Reconstructed unprocessed instrument data at full resolution, time-referenced, and annotated with ancillary information, including radiometric and geometric calibration coefficients and georeferencing parameters (i.e., platform ephemeris) computed and appended, but not applied, to the Level 0 data.

Level 1B: Level 1A data processed to sensor units and geolocated.

Level 2: Derived geophysical variables at the similar resolution and location as the Level 1 source data.

Level 3: Geophysical variables are mapped on uniform space-time grids, usually with some completeness and consistency.

Level 4: Model output or results from analyses of lower level data, e.g., variables derived from multiple measurements.

The date and time parameters follow one of two formats. The format type is referenced within the DPC Archival Data Product Tables. One format follows the UTC CCSDS ASCII Time Code Format A and the other follows the International Atomic Time (TAI) time (see reference 6). Both formats are described below. The TAI time is based on the second of the International System of Units (SI), as realized at sea level, and is formed by the Bureau International de l'Heure (BIH) on the basis of clock data supplied by cooperating establishments. It is in the form of a continuous scale, e.g., in days, hours, minutes and seconds from the origin 1993 January 1.

The UTC CCSDS ASCII Time Code Format A is described as:

YYYY-MM-DDThh:mm:ss.d→dZ

Where each character is an ASCII character using one octed with the following meanings:

YYYY	=	Year in four-character subfield with values 0001-9999
MM	=	Month in two-character subfield with values 01-12
DD	=	Day of month in two-character subfield with values 01-28, -29, -30, or -31
"T"	=	Calendar-Time separator
hh	=	Hour in two-character subfield with values 00-23
mm	=	Minute in two-character subfield with values 00-59
ss	=	Second in two-character subfield with values 00-59 (-58 or -60 during leap seconds)
d→d	=	Decimal fraction of second in one- to n-character subfield where each d has values 0-9
"Z"	=	Time code terminator (optional)

Note that the hyphen (-), colon (:), letter "T", and period (.) are used as specific subfield separators, and that all subfields must include leading zeros. As many "d" characters to the right of the period as required may be used to obtain the required precision.

The International Atomic Time (TAI) is described as:

yymmdd.ffffffff

Where each character is an ASCII character using one octed with the following meanings:

yy	=	Last two digits of year where 07 represents 2007
mm	=	Month in two-character subfield with values 01-12
dd	=	Day of month in two-character subfield with values 01-28, -29, -30, or -31
"."	=	Period as a separator
ffffffff	=	Fractional part of day

Note that the period (.) is used as a specific subfield separator, and that all subfields must include leading zeros.

2.1 Lidar Level 1B Profiles DP 1.1

The lidar Level 1B data product contains a half orbit (day or night) of calibrated and geolocated lidar profiles. The product contains data from all non-diagnostic instrument modes including nominal science, depolarization gain ratio calibration, and boresight alignment. The Level 1B data product is written in HDF. A summary of the product records is listed in Table 6.

The lidar Level 1B product contains additional data not found in the Level 0 lidar input file, including post processed ephemeris data, celestial data, and converted payload status data.

The major categories of lidar Level 1B data are:

- Lidar Profile Data
- Position Data
- Viewing Geometry

Level: 1B

Type: Archival

Frequency: 2/Orbit

Spatial Resolution Record:

Full resolution profile

Time Interval Covered:

File: Half Orbit (Day or Night)

Data File Name:

Table 6: CAL_LID_L1_CAL-ProductionStrategy-Version.Instance.hdf

2.1.1 LIDAR Instrument Level 1 Data Product

The maximum number of lidar 15-shot packets processed in one orbit approximately 8,000 (20.16 shots/sec).

Table 6: Lidar Instrument Record Summary

Record Name	Reference	Record Size	Records/File	File Size (bytes)
Core Metadata Record	Appendix A	870	1	870
Archive Metadata Record	Appendix A	4	1	4
Lidar Metadata Record	Table 7	3,117	1	3,117
Spacecraft Position, Attitude, and Celestial Record	Table 8	124	63,500	7,874,000
Profile Geolocation and Viewing Geometry	Table 9	40	63,500	2,540,000
Lidar Profile Science Record	Table 10	7,806	63,500	495,681,000
Total Size Bytes				**506,098,991**
Total Size Mbytes				**482.654**

2.1.2 LIDAR Instrument Level 1 Data Metadata

The LIDAR Instrument Level 1 Data products include three Vdata record types (i.e., metadata) shown in the tables above. Listings for the core metadata and the archive metadata are provided in Appendix A. The metadata parameters specific to the LIDAR Instrument Level 1 Data Product are listed in Table 7.

Table 7: Lidar Metadata Record

Parameter	Data Type	Units	Nominal Range	Elem/ Rec	Bytes
Product_ID	Char	NoUnits	L1_LIDAR_Science	80	80
Date_Time_at_Granule_Start[A]	Char	NoUnits	4/2006 – 6/2016	27	27
Date_Time_at_Granule_End[A]	Char	NoUnits	4/2006 – 6/2016	27	27
Date_Time_of_Production[A]	Char	NoUnits	4/2006 – 6/2016	27	27
Number_of_Good_Profiles	Int_32	NoUnits	0…63,630	1	4
Number_of_Bad_Profiles	Int_32	NoUnits	0…63,630	1	4
Initial_Subsatellite_Latitude	Float_32	deg	-90.0…90.0	1	4
Initial_Subsatellite_Longitude	Float_32	deg	-180.0…180.0	1	4
Final_Subsatellite_Latitude	Float_32	deg	-90.0…90.0	1	4
Final_Subsatellite_Longitude	Float_32	deg	-180.0…180.0	1	4
Orbit_Number_at_Granule_Start	UInt_32	N/A	$1…2^{32}$-1	1	4
Orbit_Number_at_Granule_End	UInt_32	N/A	$1…2^{32}$-1	1	4
Orbit_Number_Change_Time[D]	Float_64	NoUnits	60,426.0…160,601.0	1	8
Path_Number_at_Granule_Start	Int_16	N/A	1…233	1	2
Path_Number_at_Granule_End	Int_16	N/A	1…233	1	2
Path_Number_Change_Time[D]	Float_64	NoUnits	60,426.0…160,601.0	1	8
Ephemeris_Files_Used	Char	NoUnits	2 file names max.	160	160
Attitude_Files_Used	Char	NoUnits	2 file names max.	160	160
GEOS_Version	Char	NoUnits	N/A	64	64
Percent_532-parallel_Bad	Float_32	%	0.0…100.0	1	4
Percent_532-perpendicular_Bad	Float_32	%	0.0…100.0	1	4
Percent_1064_Bad	Float_32	%	0.0…100.0	1	4
Percent_532-parallel_Missing	Float_32	%	0.0…100.0	1	4
Percent_532-perpendicular_Missing	Float_32	%	0.0…100.0	1	4
Percent_1064_Missing	Float_32	%	0.0…100.0	1	4
Cal_Region_Top_Altitude_532	Float_32	km	0.0...40.0	1	4
Cal_Region_Base_Altitude_532	Float_32	km	0.0...40.0	1	4
Lidar_Data_Altitudes	Float_32	km	-2.0…40.0	583	2,332
Met_Data_Altitudes	Float_32	km	-2.0…40.0	33	132
Rayleigh_Extinction_Cross-section_532	Float_32	m^2	5.167E-31	1	4
Rayleigh_Extinction_Cross-section_1064	Float_32	m^2	3.127E-32	1	4
Rayleigh_Backscatter_Cross-section_532	Float_32	m^2sr^{-1}	5.930E-32	1	4
Rayleigh_Backscatter_Cross-section_1064	Float_32	m^2sr^{-1}	3.592E-33	1	4
Ozone_Absorption_Cross-section_532	Float_32	m^2	2.728461E-25	1	4
Ozone_Absorption _Cross-section_1064	Float_32	m^2	0.0	1	4
Record Size (bytes)					**3,117**

A) UTC CCSDS ASCII Time Code Format A
B) TAI time converted to UTC time and stored in format: yymmdd.ffffffff

2.1.3 LIDAR Instrument Level 1 Data Scientific Data Sets

Table 8, Table 9 and Table 10 summarize the contents of each scientific data set (SDS) contained within the LIDAR Instrument Level 1 Data products. Each parameter is listed using the same SDS name that is used in the respective HDF files. Units are given for each parameter, as is the range of valid data values.

Table 8: Lidar Spacecraft Position, Attitude, and Celestial Record

Parameter	Data Type	Units	Nominal Range	Elem/Rec	Bytes
Spacecraft_Altitude	Float_32	km	700.0…720.0	1	4
Spacecraft_Position[B]	Float_64	km	-8,000.0…8,000.0	3	24
Spacecraft_Velocity[B]	Float_64	$km \cdot sec^{-1}$	-10.0…10.0	3	24
Spacecraft_Attitude	Float_64	deg	-180.0…180.0	3	24
Spacecraft_Attitude_Rate	Float_64	$deg \cdot sec^{-1}$	-10.0…10.0	3	24
Subsatellite_Latitude	Float_32	deg	-90.0…90.0	1	4
Subsatellite_Longitude	Float_32	deg	-180.0…180.0	1	4
Earth-Sun_Distance	Float_64	AU	0.98…1.02	1	8
Subsolar_Latitude	Float_32	deg	-90.0…90.0	1	4
Subsolar_Longitude	Float_32	deg	-180.0…180.0	1	4
Record Size (bytes)					**124**

B) ECR Coordinate System

Table 9: Lidar Profile Geolocation and Viewing Geometry

Parameter	Data Type	Units	Nominal Range	Elem/Rec	Bytes
Latitude	Float_32	deg	-90.0…90.0	1	4
Longitude	Float_32	deg	-180.0…180.0	1	4
Off_Nadir_Angle	Float_32	deg	0.0…10.0	1	4
Viewing_Zenith_Angle	Float_32	deg	0.0…90.0	1	4
Viewing_Azimuth_Angle	Float_32	deg	-180.0…180.0	1	4
Solar_Zenith_Angle	Float_32	deg	0.0…180.0	1	4
Solar_Azimuth_Angle	Float_32	deg	-180.0…180.0	1	4
Scattering_Angle	Float_32	deg	0.0…180.0	1	4
Surface_Altitude_Shift	Float_32	km	-0.15…0.15	1	4
Number_Bins_Shift	Int_32	NoUnits	-5…5	1	4
Record Size (bytes)					**40**

Table 10: Lidar Profile Science Record

Parameter	Data Type	Units	Nominal Range	Elem/ Rec	Bytes
Profile_Time[C]	Float_64	sec	4.204E8…7.389E8	1	8
Profile_UTC_Time[D]	Float_64	NoUnits	60,426.0…160,601.0	1	8
Profile_ID[E]	Int_32	NoUnits	1…228,630	1	4
Land_Water_Mask	Int_8	NoUnits	0…7	1	1
IGBP_Surface_Type	Int_8	NoUnits	1…18	1	1
NSIDC_Surface_Type	UInt_8	NoUnits	0…255	1	1
Day_Night_Flag	Int_8	NoUnits	0…1	1	1
Frame_Number	Int_16	NoUnits	1…11	1	2
Lidar_Mode	Int_16	NoUnits	1…6	1	2
Lidar_Submode	Int_16	NoUnits	1…25	1	2
Surface_Elevation	Float_32	km	-1.0…9.0	1	4
Laser_Energy_532	Float_32	J	0.003…0.135	1	4
Perpendicular_Amplifier_Gain_532	Float_32	V/V	28.2…178.0	1	4
Parallel_Amplifier_Gain_532	Float_32	V/V	28.2…178.0	1	4
Perpendicular_Background_Monitor_532	Float_32	count	800.0…4,000.0	1	4
Parallel_Background_Monitor_532	Float_32	count	-100.0…4,000.0	1	4
Depolarization_Gain_Ratio_532	Float_32	NoUnits	0.0…2.5	1	4
Depolarization_Gain_Ratio_Uncertainty_532	Float_32	NoUnits	0.0…TBD	1	4
Calibration_Constant_532	Float_32	$km^3 \cdot sr \cdot$ count	3.0E10…9.0E10	1	4
Calibration_Constant_Uncertainty_532	Float_32	$km^3 \cdot sr \cdot$ count	1.2E9…2.6E9	1	4
Total_Attenuated_Backscatter_532	Float_32	$m^{-1}\ sr^{-1}$	0.0…3.1	583	2,332
Perpendicular_Attenuated_Backscatter_532	Float_32	$m^{-1}\ sr^{-1}$	0.0…1.5	583	2,332
Perpendicular_RMS_Baseline_532[F]	Float_32	count	0.0…2,700.0	1	4
Parallel_RMS_Baseline_532[F]	Float_32	count	0.0…3,200.0	1	4
Laser_Energy_1064	Float_32	J	0.038…0.12	1	4
Amplifier_Gain_1064	Float_32	V/V	102.0…195.0	1	4
Calibration_Constant_1064	Float_32	$km^3 \cdot sr \cdot$ count	4.0E9…1.2E12	1	4
Calibration_Constant_Uncertainty_1064	Float_32	$km^3 \cdot sr \cdot$ count	5.0E7…4.6E8	1	4
Attenuated_Backscatter_1064	Float_32	$m^{-1}\ sr^{-1}$	0.0…2.0	583	2,332
RMS_Baseline_1064[F]	Float_32	count	200.0…1,800.0	1	4
Molecular_Number_Density	Float_32	m^{-3}	$8x10^{22}$…$5x10^{25}$	33	132
Ozone_Number_Density	Float_32	m^{-3}	$1x10^{17}$…$1x10^{19}$	33	132
Temperature	Float_32	ºC	-120.0…60.0	33	132
Pressure	Float_32	mb	1.0…1086.0	33	132
Relative_Humidity	Float_32	%	0.0…150.0	33	132
Surface_Wind_Speeds	Float_32	m/sec	-80.0…80.0	2	8
Tropopause_Height	Float_32	km	4.0…22.0	1	4
Tropopause_Temperature	Float_32	°C	-100.0…-20.0	1	4
Noise_Scale_Factor_532_Perpendicular	Float_32	$count^{1/2}$	5.0…6.0[G]	1	4
Noise_Scale_Factor_532_Parallel	Float_32	$count^{1/2}$	5.5…6.5[G]	1	4
Noise_Scale_Factor_1064	Float_32	$count^{1/2}$	0.0[H]	1	4
Perpendicular_Column_Reflectance_532	Float_32	NoUnits	0.0…1	1	4
Perpendicular_Column_Reflectance_Uncertainty_532	Float_32	NoUnits	0.0…TBD	1	4
Parallel_Column_Reflectance_532	Float_32	NoUnits	0.0…1	1	4
Parallel_Column_Reflectance_Uncertainty_532	Float_32	NoUnits	0.0…TBD	1	4
QC_Flag	UInt_32	NoUnits	0…1,677,215	1	4
QC_Flag_2	UInt_32	NoUnits	0…33,554,431	1	4
Total Bytes per Record					**7,806**

C) International Atomic Time (TAI) seconds from Jan. 1, 1993

D) TAI time converted to UTC time and stored in format: yymmdd.ffffffff
E) The minimum is the first profile and the maximum is 90 + 99 minutes
F) The ranges given include the nominal ranges with a little headroom. However, these are single-shot values and it is fairly common to have individual shots that exceed these values, sometimes by a lot when we get a noise spike from radiation. Because the night and day gains are different, the lowest values occur toward the ends of the day segments, when the gain is low and the background is low. For the 532 channels, the highest values occur at night in the SAA when the gain is high and the noise is fairly high. The highest 1064 values (except for noise spikes) occur in the daytime.
G) Nighttime granule values are a mean derived from previous daytime granule values. For daytime granules, values are computed for every column and users are suggested to use the mean or median instead of individual values for each column.
H) Noise scale factor for the 1064 nm channel is currently set to be 0

2.2 IIR Level 1B Radiances DP 1.2

The IIR Level 1B data product contains a half orbit of geolocated, calibrated radiances. Image data are registered to a 1 km grid centered on the lidar track. The Level 1B data product is written in HDF. A summary of the product records is listed in Table 11.

The major categories for IIR Level 1B data are:

- IIR Earth View
- Position Data
- Viewing Geometry

Level: 1B

Type: Archival

Frequency: 2 per Orbit

Spatial Resolution Record:

1 km pixels x 70 km wide swath

Time Interval Covered:

File: Half Orbit (Day or Night)

Data File Name:

Table 11: CAL_IIR_L1-ProductionStrategy-Version.Instance.hdf

2.2.1 Infrared Imaging Radiometer Level 1 Data Product

The maximum number of IIR sequences processed in one orbit is 729, which equates to 1 sequence every 8.184 seconds. A sequence is a collection of 6 images; 3 Earth views and 3 calibration views (deep space or blackbody). Image data are registered to a 1 km grid centered on the lidar track. Each grid line occurs every 3 lidar shots, or 40,095 grid lines per orbit (20,048 per half orbit).

Table 11: IIR Record Summary

Record Name	Reference	Record Size	Records/File	File Size (bytes)
Core Metadata Record	Appendix A	870	1	870
Archive Metadata Record	Appendix A	4	1	4
IIR Metadata Record	Table 12	821	1	821
Spacecraft Position, Attitude, and Celestial Record	Table 13	360	384	138,240
Earth View Record	Table 14	2,548	20,048	51,082,304
Total Size (bytes)				**51,222,239**
Total Size (Mbytes)				**48.8493**

2.2.2 IIR Level 1 Metadata

The IIR Level 1 products include three Vdata record types (i.e., metadata) shown in the tables above. Listings for the core metadata and the archive metadata are provided in Appendix A. The metadata parameters specific to the IIR Level 1 Product are listed in Table 12.

Table 12: IIR Level 1 Metadata Record

Parameter	Data Type	Units	Nominal Range	Elem/ Rec	Bytes
Product_ID	Char	N/A	L1_IIR	80	80
Date_Time_at_Granule_Start[A]	Char	N/A	4/2006 – 6/2016	27	27
Date_Time_at_Granule_End[A]	Char	N/A	4/2006 – 6/2016	27	27
Date_Time_of_Production[A]	Char	N/A	4/2006 – 6/2016	27	27
Number_of_IIR_Grid_Line_Records	UInt_16	N/A	0…65,535	1	2
Initial_Subsatellite_Latitude	Float_32	deg	-90.0…90.0	1	4
Initial_Subsatellite_Longitude	Float_32	deg	-180.0…180.0	1	4
Final_Subsatellite_Latitude	Float_32	deg	-90.0…90.0	1	4
Final_Subsatellite_Longitude	Float_32	deg	-180.0…180.0	1	4
Orbit_Number_at_Granule_Start	UInt_32	N/A	$1…2^{32}-1$	1	4
Orbit_Number_at_Granule_End	UInt_32	N/A	$1…2^{32}-1$	1	4
Orbit_Number_Change_Time[D]	Float_64	NoUnits	60,426.0…160,601.0	1	8
Path_Number_at_Granule_Start	Int_16	N/A	1…233	1	2
Path_Number_at_Granule_End	Int_16	N/A	1…233	1	2
Path_Number_Change_Time[D]	Float_64	NoUnits	60,426.0…160,601.0	1	8
Ephemeris_Files_Used	Char	N/A	2 file names max.	160	160
Attitude_Files_Used	Char	N/A	2 file names max.	160	160
Level_0_Files_Used	Char	N/A	2 file names max.	160	160
Level_1_code_version_Used	Char	N/A		20	20
Input_parameter_version_number_used_Radiometry	UInt_16	N/A		1	2
Input_parameter_date_of _application_Radiometry	Int_8	N/A		27	27
Input_parameter_version_number_used_Geometry	UInt_16	N/A		1	2
Input_parameter_date_of _application_Geometry	Int_8	N/A		27	27
Percentage_of_8.65_Good_Pixels	Float_32	%	0.0…100.0	1	4
Percentage_of_12.05_Good_Pixels	Float_32	%	0.0…100.0	1	4
Percentage_of_10.6_Good_Pixels	Float_32	%	0.0…100.0	1	4
Percentage_of_Good_Pixels_3_Channels	Float_32	%	0.0…100.0	1	4
Percentage_of_Missing_Pixels	Float_32	%	0.0…100.0	1	4
Number_of_Images_Processed	Int_16	N/A	0…2,187	1	2
Percentage_of_Missing_Images	Float_32	%	0.0…100.0	1	4
Number_of_Equalization_mode	Int_16	N/A	0…TBD	1	2
Altitude_of_Projection	Float_32	km	0.0…40.0	1	4
Initial_Absolute_Sequence	Int_16	N/A	0…TBD	1	2
Final_Absolute_Sequence	Int_16	N/A	0…TBD	1	2
Grid_Line_Delta_Time	Float_32	sec	0.0…TBD	1	4
Scale_Factor_for_Radiance	Float_32	N/A	0.0…TBD	1	4
Radiance_Offset	Float_32	N/A	0.0…TBD	1	4
Scale_Factor_for_Viewing_Angle	Float_32	N/A	0.0…TBD	1	4
Viewing_Angle_Offset	Float_32	N/A	0.0…TBD	1	4
Record Size (bytes)					**821**

A) UTC CCSDS ASCII Time Code Format A

D) TAI time converted to UTC time and stored in format: yymmdd.ffffffff

2.2.3 IIR Level 1 Scientific Data Sets

Table 13 and Table 14 summarize the contents of each scientific data set (SDS) contained within the IIR Level 1 products. Each parameter is listed using the same SDS name that is used in the respective HDF files. Units are given for each parameter, as is the range of valid data values.

Table 13: IIR Spacecraft Position, Attitude, and Celestial Record (1 per Earth view)

Parameter	Data Type	Units	Nominal Range	Elem/ Rec	Bytes
Time_TAI_8.65[C]	Float_64	sec	0.0...TBD	1	8
Time_UTC_8.65[D]	Float_64	NoUnits	0.0...TBD	1	8
Spacecraft_Position_8.65[B]	Float_64	km	-8,000.0...8,000.0	3	24
Spacecraft_Velocity_8.65[B]	Float_64	$km \cdot sec^{-1}$	-10.0...10.0	3	24
Spacecraft_Attitude_8.65	Float_64	deg	-180.0...180.0	3	24
Spacecraft_Attitude_Rate_8.65	Float_64	$deg \cdot sec^{-1}$	-10.0...10.0	3	24
Subsatellite_Latitude_8.65	Float_32	deg	-90.0...90.0	1	4
Subsatellite_Longitude_8.65	Float_32	deg	-180.0...180.0	1	4
Time_TAI_12.05[C]	Float_64	sec	0.0…TBD	1	8
Time_UTC_12.05[D]	Float_64	NoUnits	0.0…TBD	1	8
Spacecraft_Position_12.05[B]	Float_64	km	-8,000.0...8,000.0	3	24
Spacecraft_Velocity_12.05[B]	Float_64	$km \cdot sec^{-1}$	-10.0...10.0	3	24
Spacecraft_Attitude_12.05	Float_64	deg	-180.0...180.0	3	24
Spacecraft_Attitude_Rate_12.05	Float_64	$deg \cdot sec^{-1}$	-10.0...10.0	3	24
Subsatellite_Latitude_12.05	Float_32	deg	-90.0...90.0	1	4
Subsatellite_Longitude_12.05	Float_32	deg	-180.0...180.0	1	4
Time_TAI_10.6[C]	Float_64	sec	0.0…TBD	1	8
Time_UTC_10.6[D]	Float_64	NoUnits	0.0…TBD	1	8
Spacecraft_Position_10.6[B]	Float_64	km	-8,000.0...8,000.0	3	24
Spacecraft_Velocity_10.6[B]	Float_64	$km \cdot sec^{-1}$	-10.0...10.0	3	24
Spacecraft_Attitude_10.6	Float_64	deg	-180.0...180.0	3	24
Spacecraft_Attitude_Rate_10.6	Float_64	$deg \cdot sec^{-1}$	-10.0...10.0	3	24
Subsatellite_Latitude_10.6	Float_32	deg	-90.0...90.0	1	4
Subsatellite_Longitude_10.6	Float_32	deg	-180.0...180.0	1	4
Record Size (bytes)					**360**

B) ECR Coordinate System
C) International Atomic Time (TAI) seconds from Jan. 1, 1993
D) TAI time converted to UTC time and stored in format: yymmdd.ffffffff

Table 14: Earth View Record (1 per grid line)

Parameter	Data Type	Units	Nominal Range	Elem/ Rec	Bytes
Latitude	Float_32	deg	-90.0…90.0	69	276
Longitude	Float_32	deg	-180.0…180.0	69	276
Lidar_Shot_Time[C]	Float_64	sec	0.0…TBD	1	8
Lidar_Shot_UTC_Time[D]	Float_64	NoUnits	0.0…TBD	1	8
Image_Time_8.65[C]	Float_64	sec	TBD	1	8
Image_UTC_Time_8.65[D]	Float_64	NoUnits	0.0…TBD	1	8
Viewing_Zenith_Angle_8.65	Int_16	deg	0…90	69	138
Viewing_Azimuth_Angle_8.65	Int_16	deg	-180…180	69	138
Sequence_Number_8.65	Int_16	count	0…65,535	69	138
Calibrated_Radiances_8.65	Int_16	$Wm^{-2}sr^{-1}\mu m^{-1}$	0…TBD	69	138
Image_Time_12.05[C]	Float_64	sec	TBD	1	8
Image_UTC_Time_12.05[D]	Float_64	NoUnits	0.0…TBD	1	8
Viewing_Zenith_Angle_12.05	Int_16	deg	0…90	69	138
Viewing_Azimuth_Angle_12.05	Int_16	deg	-180…180	69	138
Sequence_Number_12.05	Int_16	count	0…65,535	69	138
Calibrated_Radiances_12.05	Int_16	$Wm^{-2}sr^{-1}\mu m^{-1}$	0…TBD	69	138
Image_Time_10.6[C]	Float_64	sec	TBD	1	8
Image_UTC_Time_10.6[D]	Float_64	NoUnits	0.0…TBD	1	8
Viewing_Zenith_Angle_10.6	Int_16	deg	0…90	69	138
Viewing_Azimuth_Angle_10.6	Int_16	deg	-180…180	69	138
Sequence_Number_10.6	Int_16	count	0…65,535	69	138
Calibrated_Radiances_10.6	Int_16	$Wm^{-2}sr^{-1}\mu m^{-1}$	0…TBD	69	138
Pixel_Quality_Index	UInt_32	N/A	N/A	69	276
Record Size (bytes)					**2,548**

C) International Atomic Time (TAI) seconds from Jan. 1, 1993

D) TAI time converted to UTC time and stored in format: yymmdd.ffffffff

2.3 WFC Level 1B Scans DP 1.3

The Wide Field Camera Level 1B data product contains geolocated radiance data. The data product is written in HDF. A summary of the product records is listed for each file in the following:

The major categories of WFC Level 1B data are:

- WFC 125 m Earth View Data
- WFC 1 km Earth View Data
- Position Data
- Viewing Geometry
- Housekeeping Data

Level: 1B

Type: Archival

Frequency: 1/Orbit

Spatial Resolution Record:

1 km pixels x 61 km wide swath

125 m pixels x 5 km wide swath

Time Interval Covered:

File: Half Orbit (Day Only)

Data File Names:

Table 15: CAL_WFC_L1_1Km-ProductionStrategy-Version.Instance.hdf

Table 16: CAL_WFC_L1_125m-ProductionStrategy-Version.Instance.hdf

Table 17: CAL_WFC_L1_IIR-ProductionStrategy-Version.Instance.hdf

2.3.1 Wide Field Camera Level 1 Data Product

The maximum number of 5 km WFC packets processed in one orbit is 3,124 (daytime only).

For each orbit, 3 files are created to represent the WFC Level 1 data product. They are the "1 km Registered Science Data", the "1 km Native Science Data" and the "125 m Native Science Data". Table 15, Table 16 and Table 17 show the data structure of each file.

Table 15: WFC Record Summary - 1 km Registered Science

Record Name	Reference	Record Size	Records/ File	File Size (bytes)
Core Metadata Record	Appendix A	870	1	870
Archive Metadata Record	Appendix A	4	1	4
WFC Metadata Record	Table 18	2,149	1	2,149
1 km Registered Science Record	Table 19	2,704	15,620	42,236,480
Total Size (bytes)				**42,239,503**
Total Size (Mbytes)				**40.2827**

Table 16: WFC Record Summary - 1 km Native Science

Record Name	Reference	Record Size	Records/ File	File Size (bytes)
Core Metadata Record	Appendix A	870	1	870
Archive Metadata Record	Appendix A	4	1	4
WFC Metadata Record	Table 18	2,149	1	2,149
1 km Native Science Record	Table 20	2,712	15,620	42,361,440
Reflectance Bin Record	Table 20	288	915	263,520
Total Size (bytes)				**42,627,983**
Total Size (Mbytes)				**40.653**

Table 17: WFC Record Summary - 125 m Native Science

Record Name	Reference	Record Size	Records/ File	File Size (bytes)
Core Metadata Record	Appendix A	870	1	870
Archive Metadata Record	Appendix A	4	1	4
WFC Metadata Record	Table 18	2,149	1	2,149
125 m Native Science Record	Table 21	1,140	124,960	142,454,400
Reflectance Bin Record	Table 21	288	600	172,800
Total Size (bytes)				**142,630,223**
Total Size (Mbytes)				**136.023**

2.3.2 WFC Level 1 data Metadata

The WFC Level 1 data products include three Vdata record types (i.e., metadata) shown in the tables above. Listings for the core metadata and the archive metadata are provided in Appendix A. The metadata parameters specific to the WFC Level 1 data Product are listed in Table 18.

Table 18: WFC Level 1 Metadata Record

Parameter	Data Type	Units	Range	Elem/ Rec	Bytes
Product_ID	Char	NoUnits	WFC_Native_125m WFC_Native_1Km WFC_IIR_Registered_1km	80	80
Date_Time_at_Granule_Start[A]	Char	NoUnits	4/2006 – 6/2016	27	27
Date_Time_at_Granule_End[A]	Char	NoUnits	4/2006 – 6/2016	27	27
Date_Time_of_Production[A]	Char	NoUnits	4/2006 – 6/2016	27	27
Number_of_Good_125m_Records	Int_32	NoUnits	0…160,320	1	4
Number_of_Bad_125m_Records	Int_32	NoUnits	0…160,320	1	4
Number_of_Good_1km_Records	Int_32	NoUnits	0…20,040	1	4
Number_of_Bad_1km_Records	Int_32	NoUnits	0…20,040	1	4
Initial_Subsatellite_Latitude	Float_32	deg	-90.0…90.0	1	4
Initial_Subsatellite_Longitude	Float_32	deg	-180.0…180.0	1	4
Final_Subsatellite_Latitude	Float_32	deg	-90.0…90.0	1	4
Final_Subsatellite_Longitude	Float_32	deg	-180.0…180.0	1	4
Orbit_Number_at_Granule_Start	UInt_32	N/A	$1\ldots2^{32}-1$	1	4
Orbit_Number_at_Granule_End	UInt_32	N/A	$1\ldots2^{32}-1$	1	4
Orbit_Number_Change_Time[D]	Float_64	NoUnits	60,426.0…160,601.0	1	8
Path_Number_at_Granule_Start	Int_16	N/A	1…233	1	2
Path_Number_at_Granule_End	Int_16	N/A	1…233	1	2
Path_Number_Change_Time[D]	Float_64	NoUnits	60,426.0…160,601.0	1	8
Ephemeris_Files_Used	Char	N/A	2 file names max.	160	160
Attitude_Files_Used	Char	N/A	2 file names max.	160	160
Vicarious_Calibration_File_Used	Char	N/A	N/A	80	80
1km_Radiance_Calibration_Coefficients	Float_64	$(Wm^{-2}\,sr^{-1}\mu m^{-1})$ $(count^{-1})(ms)$	N/A	61	488
125m_Radiance_Calibration_Coefficients	Float_64	$(Wm^{-2}\,sr^{-1}\mu m^{-1})$ $(count^{-1})(ms)$	N/A	40	320
Column_Number_of_Center_Image_Pixel	Int_16	NoUnits	244…268	1	2
Row_Number_of_Center_Image_Pixel	Int_16	NoUnits	229…258	1	2
Frame_Time	Float_32	ms	N/A	1	4
Integration_Time	Float_32	ms	N/A	1	4
Total_Poss_Day_Packets	Int_32	NoUnits	0…4,000	1	4
Total_Proc_Day_Packets	Int_32	NoUnits	0…4,000	1	4
Total_Proc_Night_Packets	Int_32	NoUnits	0…4,000	1	4
Reflectance_Bins_Min	Float_32	NoUnits	0.0…1.4	72	288
Reflectance_Bins_Max	Float_32	NoUnits	0.0…9,999.0	72	288
Solar_Zenith_Bins_Min	Float_32	deg	0.0…70.0	15	60
Solar_Zenith_Bins_Max	Float_32	deg	5.0…75.0	15	60
Record Size (bytes)					**2,149**

A) UTC CCSDS ASCII Time Code Format A
D) TAI time converted to UTC time and stored in format: yymmdd.ffffffff

2.3.3 WFC Level 1 Scientific Data Sets

Table 19, Table 20, and Table 21 summarize the contents of each scientific data set (SDS) contained within the WFC Level 1 data products. Parameters are listed using the same SDS names as in respective HDF files. Units are given for each parameter, as is the range of valid data values.

Table 19: 1 km Registered Science Record

Parameter	Data Type	Units	Nominal Range	Elem/Rec	Bytes
Lidar_Shot_Time[3]	Float_64	sec	0.0…1.0E9	1	8
Lidar_Shot_UTC_Time[4]	Float_64	NoUnits	0.0…1.0E9	1	8
Latitude	Float_64	deg	-90.0…90.0	61	488
Longitude	Float_64	deg	-180.0…180.0	61	488
Radiance	Float_32	$Wm^{-2}sr^{-1}\mu m^{-1}$	0.0...2,000.0	61	244
Reflectance	Float_32	NoUnits	0.0…2.0	61	244
1km_Homogeneity	Float_32	NoUnits	N/A	1	4
Solar_Zenith	Float_32	deg	0.0…90.0	61	244
Solar_Azimuth	Float_32	deg	-180.0…180.0	61	244
Viewing_Zenith	Float_32	deg	0.0…90.0	61	244
Viewing_Azimuth	Float_32	deg	-180.0…180.0	61	244
Pixel_QC_Flag	UInt_32	NoUnits	N/A	61	244
Total Bytes per Record					**2,704**

Table 20: 1 km Native Science Record

Parameter	Data Type	Units	Nominal Range	Elem/Rec	Bytes
Scan_Time[C]	Float_64	sec	0.0…1.0E9	1	8
Scan_UTC_Time[D]	Float_64	NoUnits	0.0…1.0E9	1	8
Latitude	Float_64	deg	-90.0…90.0	61	488
Longitude	Float_64	deg	-180.0…180.0	61	488
Radiance	Float_32	$Wm^{-2}sr^{-1}\mu m^{-1}$	0.0…2,000.0	61	244
Reflectance	Float_32	NoUnits	0.0...2.0	61	244
1km_Homogeneity	Float_32	NoUnits	N/A	1	4
Solar_Zenith	Float_32	deg	0.0…90.0	61	244
Solar_Azimuth	Float_32	deg	-180.0…180.0	61	244
Viewing_Zenith	Float_32	deg	0.0…90.0	61	244
Viewing_Azimuth	Float_32	deg	-180.0…180.0	61	244
CCD_Temperature	Float_32	°C	-100.0…100.0	1	4
BasePlate_Temperature	Float_32	°C	-100.0…100.0	1	4
Reflectance_Bins[E]	Int_32	NoUnits	0…20,000	0	0
Pixel_QC_Flag	UInt_32	NoUnits	N/A	61	244
Total Bytes per Record					**2,712**

C) International Atomic Time (TAI) seconds from Jan. 1, 1993
D) TAI time converted to UTC time and stored in format: yymmdd.ffffffff
E) For each pixel there are 72 reflectance bins within 15 solar zenith angle bins and are totaled for the entire orbit. The total number of bytes for this parameter is reported in Table 16.

Table 21: 125 m Native Science Record

Parameter/Field	Data Type	Units	Nominal Range	Elem/Rec	Bytes
Scan_Time[C]	Float_64	sec	0.0…1.0E9	1	8
Scan_UTC_Time[C]	Float_64	NoUnits	0.0…1.0E9	1	8
Latitude	Float_64	deg	-90.0…90.0	40	320
Longitude	Float_64	deg	-180.0…180.0	40	320
Radiance	Float_32	$Wm^{-2}sr^{-1}\mu m^{-1}$	0.0...2,000.0	40	160
Reflectance	Float_32	NoUnits	0.0...2.0	40	160
125m_Homogeneity	Float_32	NoUnits	N/A	1	4
Reflectance_Bins_125[E]	Int_32	NoUnits	0…160,000	0	0
Pixel_QC_Flag	UInt_32	NoUnits	N/A	40	160
Total Bytes per Record					**1,140**

C) International Atomic Time (TAI) seconds from Jan. 1, 1993
D) TAI time converted to UTC time and stored in format: yymmdd.ffffffff
E) For each pixel there are 72 reflectance bins within 15 solar zenith angle bins and are totaled for the entire orbit. The total number of bytes for this parameter is reported in Table 17.

2.4 Lidar Level 2 Cloud and Aerosol Layer Products DP 2.1A

The Lidar Level 2 cloud layer products are produced at three horizontal resolutions: 1/3 km, 1 km, and 5 km. The Lidar Level 2 aerosol layer products are produced at a 5 km horizontal resolution. The cloud and aerosol layer data products are written in Hierarchical Data Format (HDF). Table 22, Table 23, Table 24 and Table 25 summarize the content and estimated size of each of the layer products. Four data files will be produced for each granule: a 1/3 km resolution cloud product, 1 km resolution cloud product, a 5 km resolution cloud product, and a 5 km resolution aerosol product.

Within the Lidar Cloud and Aerosol Layer Product there are two general classes of data:

- Column Properties (including position data and viewing geometry)
- Layer Properties

The lidar layer products consist of a sequence of column descriptors, each one of which is associated with a variable number of layer descriptors. The column descriptors specify the temporal and geo-physical location of the column of the atmosphere through which a given lidar pulse travels. Also included in the column descriptors are indicators of surface lighting conditions, information about the surface type, and the number of features (e.g., cloud and/or aerosol layers) identified within the column.

For each feature within a column, a set of layer descriptors is reported. The layer descriptors provide information about the spatial and optical characteristics of a feature, such as base and top altitudes, integrated attenuated backscatter, and optical depth.

The number of layers has a substantial impact on the data product sizes; therefore, for each set of column descriptors defined in this section, the maximum number of layer descriptors is specified in the element/record and byte fields. These values are meant to represent an upper bound on the number of layers that might be reasonably encountered in a real-world data set.

Level: 2

Type: Archival

Frequency: 2/Orbit

Spatial Resolution Record:

1/3 km (full resolution)

1 km horizontal

5 km horizontal

Time Interval Covered:

File: Half Orbit (Day or Night)

Data File Names:

Table 22: CAL_LID_L2_333mCLay-ProductionStrategy-Version.Instance.hdf
Table 23: CAL_LID_L2_01kmCLay -ProductionStrategy-Version.Instance.hdf
Table 24: CAL_LID_L2_05kmCLay -ProductionStrategy-Version.Instance.hdf
Table 25: CAL_LID_L2_05kmALay -ProductionStrategy-Version.Instance.hdf

2.4.1 Lidar Level 2 Cloud and Aerosol Layers Record Summary

Table 22: 1/3 km Lidar Cloud Layer Record Summary

Record Name	Reference Table	Individual Record Size	Records/ File	File Size (bytes)
Core Metadata Record	Appendix A	870	1	870
Archive Metadata Record	Appendix A	4	1	4
Lidar cloud & aerosol metadata record	Table 26	22,670	1	22,670
1/3 km Column Descriptor Record: Clouds	Table 27	116	60,143	6,976,588
1/3 km Layer Descriptor Record: Clouds	Table 28	850	60,143	51,121,550
Total Size 1/3-km Cloud Layer Product (bytes)				**58,121,682**
Total Size 1/3-km Cloud Layer Product (MBytes)				**55.429**

Table 23: 1 km Lidar Cloud Layer Record Summary

Record Name	Reference Table	Individual Record Size	Records/ File	File Size (bytes)
Core Metadata Record	Appendix A	870	1	870
Archive Metadata Record	Appendix A	4	1	4
Lidar cloud & aerosol metadata record	Table 26	22,670	1	22,670
1 km Column Descriptor Record: Clouds	Table 29	116	20,048	2,325,568
1 km Layer Descriptor Record: Clouds	Table 30	1,610	20,048	32,277,280
Total Size 1 km Cloud Layer Product (bytes)				**34,626,392**
Total Size 1 km Cloud Layer Product (Mbytes)				**33.022**

Table 24: 5 km Lidar Cloud Layer Record Summary

Record Name	Reference Table	Individual Record Size	Records/ File	File Size (bytes)
Core Metadata Record	Appendix A	870	1	870
Archive Metadata Record	Appendix A	4	1	4
Lidar cloud & aerosol metadata record	Table 26	22,670	1	22,670
5 km Column Descriptor Record: Clouds	Table 31	331	4,010	1,327,310
5 km Layer Descriptor Record: Clouds	Table 32	2,760	4,010	11,067,600
Total Size 5 km Cloud Layer Product (bytes)				**12,418,454**
Total Size 5 km Cloud Layer Product (Mbytes)				**11.843**

Table 25: 5 km Lidar Aerosol Layer Record Summary

Record Name	Reference Table	Individual Record Size	Records/ File	File Size (bytes)
Core Metadata Record	Appendix A	870	1	870
Archive Metadata Record	Appendix A	4	1	4
Lidar cloud & aerosol metadata record	Table 26	22,670	1	22,670
5 km Column Descriptor Record: Aerosols	Table 33	331	4,010	1,327,310
5 km Layer Descriptor Record: Aerosols	Table 34	2,466	4,010	9,888,660
Total Size 5 km Aerosol Layer Product (bytes)				**11,239,514**
Total Size 5 km Aerosol Layer Product (Mbytes)				**10.719**

2.4.2 Lidar Cloud & Aerosol Level 2 Metadata

The Lidar Cloud & Aerosol Level 2 layer products include three Vdata record types (i.e., metadata), as specified in the tables above. Listings for the core metadata and the archive metadata are provided in Appendix A. The metadata parameters specific to the cloud and aerosol Level 2 Layer Products are listed in Table 26.

Table 26: Lidar Cloud & Aerosol Level 2 Layer Metadata Record

Parameter	Data Type	Units	Nominal Range	Elem/ Rec	Bytes
Product_ID	Char	NoUnits	L2_LIDAR	80	80
Date_Time_at_Granule_Start[A]	Char	NoUnits	4/2006 – 6/2016	27	27
Date_Time_at_Granule_End[A]	Char	NoUnits	4/2006 – 6/2016	27	27
Date_Time_of_Production[A]	Char	NoUnits	4/2006 – 6/2016	27	27
Number_of_Good_Profiles	Int_32	NoUnits	0…63,630	1	4
Number_of_Bad_Profiles	Int_32	NoUnits	0…63,630	1	4
Initial_Subsatellite_Latitude	Float_32	deg	-90.0…90.0	1	4
Initial_Subsatellite_Longitude	Float_32	deg	-180.0…180.0	1	4
Final_Subsatellite_Latitude	Float_32	deg	-90.0…90.0	1	4
Final_Subsatellite_Longitude	Float_32	deg	-180.0…180.0	1	4
Orbit_Number_at_Granule_Start	UInt_32	N/A	$1…2^{32}-1$	1	4
Orbit_Number_at_Granule_End	UInt_32	N/A	$1…2^{32}-1$	1	4
Orbit_Number_Change_Time[D]	Float_64	NoUnits	60,426.0…160,601.0	1	8
Path_Number_at_Granule_Start	Int_16	N/A	1…233	1	2
Path_Number_at_Granule_End	Int_16	N/A	1…233	1	2
Path_Number_Change_Time[D]	Float_64	NoUnits	60,426.0…160,601.0	1	8
Lidar_L1_Production_Date_Time	Char	yymmdd	4/2006 – 6/2016	27	27
Number_of_Single_Shot_Records_in_File	Int_32	NoUnits	0…63,630	1	4
Number_of_Average_Records_in_File	Int_32	NoUnits	0…63,630	1	4
Number_of_Features_Found	Int_32	NoUnits	0…63,630	1	4
Number_of_Cloud_Features_Found	Int_32	NoUnits	0…63,630	1	4
Number_of_Aerosol_Features_Found	Int_32	NoUnits	0…63,630	1	4
Number_of_Indeterminate_Features_Found	Int_32	NoUnits	0…63,630	1	4
Lidar_Data_Altitudes	Float_32	km	-2.0…40.0	583	2,332
GEOS_Version	Char	NoUnits	N/A	64	64
Classifier_Coefficients_Version_Number	Char	NoUnits	0.0…99.9	1	4
Classifier_Coefficients_Version_Date	Char	yymmdd	4/2006 – 6/2016	1	6
Production_Script	Char	N/A	N/A	20,000	20,000
Record Size (bytes)					**22,670**

A) UTC CCSDS ASCII Time Code Format A
D) TAI time converted to UTC time and stored in format: yymmdd.ffffffff

2.4.3 Lidar Cloud & Aerosol Level 2 Scientific Data Sets

Table 27 through Table 34 summarize the content of each scientific data set (SDS) contained within the Lidar Level 2 layer products. Each parameter is listed using the same SDS name that is used in the respective HDF files. Units are given for each parameter, as is the range of valid data values.

Within the layer descriptors are a number of "Statistics" fields; for example, see the *Attenuated_Backscatter_Statistics_532* in Table 28, Table 30, Table 32, and Table 34. These fields are composite data structures that contain the following descriptive statistics for the named parameter:

- minimum value
- maximum value
- mean value
- standard deviation of the mean
- centroid (units = kilometers; range = feature base to feature top)
- skewness coefficient (unitless)

The units for the first four values are supplied in the 'Units' field corresponding to each "Statistics" field; e.g., the units for the first four values of the *Attenuated_Backscatter_Statistics_532* are, as indicated in Table 28, km^{-1} sr^{-1}.

Table 27: Lidar 1/3 km Column Descriptor Record: Clouds

Parameter	Data Type	Units	Nominal Range	Elem/ Rec	Bytes
Profile_ID	Int_32	NoUnits	1…3,153,600,000	1	4
Latitude	Float_32	deg	-90.0…90.0	1	4
Longitude	Float_32	deg	-180.0…180.0	1	4
Profile_Time[C]	Float_64	sec	4.204E8…7.389E8	1	8
Profile_UTC_Time[D]	Float_64	NoUnits	60,426.0…160,601.0	1	8
Day_Night_Flag	Int_8	NoUnits	0…1	1	1
Off_Nadir_Angle	Float_32	deg	0.0…5.0	1	4
Solar_Zenith_Angle	Float_32	deg	0.0…180.0	1	4
Solar_Azimuth_Angle	Float_32	deg	-180.0…180.0	1	4
Scattering_Angle	Float_32	deg	0.0…180.0	1	4
Spacecraft_Position	Float_64	km	-8,000.0…8,000.0	3	24
Parallel_Column_Reflectance_532	Float_32	NoUnits	0.0…2.0	1	4
Parallel_Column_Reflectance_Uncertainty_532	Float_32	NoUnits	0.0…TBD	1	4
Perpendicular_Column_Reflectance_532	Float_32	NoUnits	0.0…2.0	1	4
Perpendicular_Column_Reflectance_Uncertainty_532	Float_32	NoUnits	0.0…TBD	1	4
Column_Integrated_Attenuated_Backscatter_532	Float_32	sr^{-1}	0.0…2	1	4
Column_IAB_Cumulative_Probability	Float_32	NoUnits	0.0…1.0	1	4
Tropopause_Height	Float_32	km	4.0…22.0	1	4
Tropopause_Temperature	Float_32	ºC	-100.0…-20.0	1	4
IGBP_Surface_Type	Int_8	NoUnits	1…18	1	1
NSIDC_Surface_Type	UInt_8	NoUnits	0…255	1	1
Lidar_Surface_Elevation	Float_32	km	-1.0…9.0	2	8
DEM_Surface_Elevation	Float_32	km	-1.0…9.0	1	4
Number_Layers_Found	Int_8	NoUnits	0…5	1	1

Record Size (bytes)					**116**

C) International Atomic Time (TAI) seconds from Jan. 1, 1993
D) TAI time converted to UTC time and stored in format: yymmdd.ffffffff

Table 28: Lidar 1/3 km Layer Descriptor Record: Clouds

Parameter	Data Type	Units	Nominal Range	Elem/ Rec	Bytes
Layer_Top_Altitude	Float_32	km	-0.5…8.2	5	20
Layer_Base_Altitude	Float_32	km	-0.5…8.2	5	20
Layer_Top_Pressure	Float_32	hPa	1.0…1086.0	5	20
Midlayer_Pressure	Float_32	hPa	1.0…1086.0	5	20
Layer_Base_Pressure	Float_32	hPa	1.0…1086.0	5	20
Layer_Top_Temperature	Float_32	ºC	-110.0…60.0	5	20
Midlayer_Temperature	Float_32	ºC	-110.0…60.0	5	20
Layer_Base_Temperature	Float_32	ºC	-110.0…60.0	5	20
Attenuated_Backscatter_Statistics_532	Float_32	km^{-1} sr^{-1}	N/A	30	120
Integrated_Attenuated_Backscatter_532	Float_32	sr^{-1}	0.0…1.8	5	20
Integrated_Attenuated_Backscatter_Uncertainty_532	Float_32	sr^{-1}	0.0…0.5	5	20
Attenuated_Backscatter_Statistics_1064	Float_32	km^{-1} sr^{-1}	N/A	30	120
Integrated_Attenuated_Backscatter_1064	Float_32	sr^{-1}	0.0…1.8[K]	5	20
Integrated_Attenuated_Backscatter_Uncertainty_1064	Float_32	sr^{-1}	0.0…0.5	5	20
Volume_Depolarization_Ratio_Statistics	Float_32	NoUnits	N/A	30	120
Integrated_Volume_Depolarization_Ratio [L]	Float_32	NoUnits	0.0…1.0	5	20
Integrated_Volume_Depolarization_Ratio_Uncertainty	Float_32	NoUnits	0.0…2.0	5	20
Attenuated_Total_Color_Ratio_Statistics	Float_32	NoUnits	N/A	30	120
Integrated_Attenuated_Total_Color_Ratio [L]	Float_32	NoUnits	0.0…2.0	5	20
Integrated_Attenuated_Total_Color_Ratio_Uncertainty	Float_32	NoUnits	0.0…3.0	5	20
Overlying_Integrated_Attenuated_Backscatter_532	Float_32	sr^{-1}	0.0…2.0	5	20
Layer_IAB_QA_Factor	Float_32	NoUnits	0.0…1.0	5	20
Feature_Classification_Flags [J]	UInt_16	NoUnits	1…49,146	5	10
Record Size (bytes)					**850**

J) Refer to Table 44 for a detailed description of this parameter
K) While zero is the physically meaningful lower limit, small negative values may be encountered due to noise in weak signals
L) Notes for depolarization and color ratio fields: Based solely on physical considerations, the expected range for the integrated volume depolarization ratio is between 0 and 1. The range for integrated attenuated total color ratio is less certain, but should fall between 0 and 2. However, because these quantities are computed as the ratio of two noisy numbers, the expected ranges might be exceeded for weakly scattering features or when the overlying attenuation is high.

Table 29: Lidar 1 km Column Descriptor Record: Clouds

Parameter	Data Type	Units	Nominal Range	Elem/ Rec	Bytes
Profile_ID	Int_32	NoUnits	1…3,153,600,000	1	4
Latitude	Float_32	deg	-90.0…90.0	1	4
Longitude	Float_32	deg	-180.0…180.0	1	4
Profile_Time[C]	Float_64	sec	4.204E8…7.389E8	1	8
Profile_UTC_Time[D]	Float_64	NoUnits	60,426.0…160,601.0	1	8
Day_Night Flag	Int_8	NoUnits	0…1	1	1
Off_Nadir_Angle	Float_32	deg	0.0…5.0	1	4
Solar_Zenith_Angle	Float_32	deg	0.0…180.0	1	4
Solar_Azimuth_Angle	Float_32	deg	-180.0…180.0	1	4
Scattering_Angle	Float_32	deg	0.0…180.0	1	4
Spacecraft_Position	Float_64	km	-8,000.0…8,000.0	3	24
Parallel_Column_Reflectance_532	Float_32	NoUnits	0.0…2.0	1	4
Parallel_Column_Reflectance_Uncertainty_532	Float_32	NoUnits	0.0…TBD	1	4
Perpendicular_Column_Reflectance_532	Float_32	NoUnits	0.0…2.0	1	4
Perpendicular_Column_Reflectance_Uncertainty_532	Float_32	NoUnits	0.0…TBD	1	4
Column_Integrated_Attenuated_Backscatter_532	Float_32	sr^{-1}	0.0…2.0	1	4
Column_IAB_Cumulative_Probability	Float_32	NoUnits	0.0…1.0	1	4
Tropopause_Height	Float_32	km	4.0…22.0	1	4
Tropopause_Temperature	Float_32	ºC	-100.0…-20.0	1	4
IGBP_Surface_Type	Int_8	NoUnits	1…18	1	1
NSIDC_Surface_Type	UInt_8	NoUnits	0…255	1	1
Lidar_Surface_Elevation	Float_32	km	-1.0…9.0	2	8
DEM_Surface_Elevation	Float_32	km	-1.0…9.0	1	4
Number_Layers_Found	Int_8	NoUnits	0…10	1	1
Record Size (bytes)					**116**

C) International Atomic Time (TAI) seconds from Jan. 1, 1993
D) TAI time converted to UTC time and stored in format: yymmdd.ffffffff

Table 30: Lidar 1 km Layer Descriptor Record: Clouds

Parameter	Data Type	Units	Nominal Range	Elem/ Rec	Bytes
Layer_Top_Altitude	Float_32	km	-0.5…20.2	10	40
Layer_Base_Altitude	Float_32	km	-0.5…20.2	10	40
Layer_Top_Pressure	Float_32	hPa	1.0…1086.0	10	20
Midlayer_Pressure	Float_32	hPa	1.0…1086.0	10	20
Layer_Base_Pressure	Float_32	hPa	1.0…1086.0	10	20
Layer_Top_Temperature	Float_32	ºC	-110.0…60.0	10	20
Midlayer_Temperature	Float_32	ºC	-110.0…60.0	10	40
Layer_Base_Temperature	Float_32	ºC	-110.0…60.0	10	20
Attenuated_Backscatter_Statistics_532	Float_32	km^{-1} sr^{-1}	N/A	60	240
Integrated_Attenuated_Backscatter_532	Float_32	sr^{-1}	0.0…1.8	10	40
Integrated_Attenuated_Backscatter_Uncertainty_532	Float_32	sr^{-1}	0.0…0.5	10	40
Attenuated_Backscatter_Statistics_1064	Float_32	km^{-1} sr^{-1}	N/A	60	240

Parameter	Data Type	Units	Nominal Range	Elem/ Rec	Bytes
Integrated_Attenuated_Backscatter_1064	Float_32	sr^{-1}	0.0…1.8[K]	10	40
Integrated_Attenuated_Backscatter_Uncertainty_1064	Float_32	sr^{-1}	0.0…0.5	10	40
Volume_Depolarization_Ratio_Statistics	Float_32	NoUnits	N/A	60	240
Integrated_Volume_Depolarization_Ratio [L]	Float_32	NoUnits	0.0…1.0	10	40
Integrated_Volume_Depolarization_Ratio_Uncertainty	Float_32	NoUnits	0.0…2.0	10	40
Attenuated_Total_Color_Ratio_Statistics	Float_32	NoUnits	N/A	60	240
Integrated_Attenuated_Total_Color_Ratio [L]	Float_32	NoUnits	0.0…2.0	10	40
Integrated_Attenuated_Total_Color_Ratio_Uncertainty	Float_32	NoUnits	0.0…3.0	10	40
Overlying_Integrated_Attenuated_Backscatter_532	Float_32	sr^{-1}	0.0…2.0	10	40
Layer_IAB_QA_Factor	Float_32	NoUnits	0.0…1.0	10	40
CAD_Score	Int_8	NoUnits	-101…105	10	10
Feature_Classification_Flags [J]	UInt_16	NoUnits	1…49,146	10	20
Record Size (bytes)					**1,610**

J) Refer to Table 44 for a detailed description of this parameter

K) While zero is the physically meaningful lower limit, small negative values may be encountered due to noise in weak signals

L) Notes for depolarization and color ratio fields: Based solely on physical considerations, the expected range for the integrated volume depolarization ratio is between 0 and 1. The range for integrated attenuated total color ratio is less certain, but should fall between 0 and 2. However, because these quantities are computed as the ratio of two noisy numbers, the expected ranges might be exceeded for weakly scattering features or when the overlying attenuation is high.

Table 31: Lidar 5 km Column Descriptor Record: Clouds

Parameter	Data Type	Units	Nominal Range	Elem/ Rec	Bytes
Profile_ID	Int_32	NoUnits	1…3,153,600,000	2	8
Latitude	Float_32	deg	-90.0…90.0	3	12
Longitude	Float_32	deg	-180.0…180.0	3	12
Profile_Time[C]	Float_64	sec	4.204E8…7.389E8	3	24
Profile_UTC_Time[D]	Float_64	NoUnits	60,426.0…160,601.0	3	24
Day_Night_Flag	Int_8	NoUnits	0…1	1	1
Off_Nadir_Angle	Float_32	deg	0.0…5.0	1	4
Solar_Zenith_Angle	Float_32	deg	0.0…180.0	1	4
Solar_Azimuth_Angle	Float_32	deg	-180.0…180.0	1	4
Scattering_Angle	Float_32	deg	0.0…180.0	1	4
Spacecraft_Position[L]	Float_64	km	-8000.0…8000.0	9	72
Parallel_Column_Reflectance_532	Float_32	NoUnits	0.0…2.0	1	4
Parallel_Column_Reflectance_Uncertainty_532	Float_32	NoUnits	0.0…TBD	1	4
Parallel_Column_Reflectance_RMS_Variation_532	Float_32	NoUnits	0.0…TBD	1	4
Perpendicular_Column_Reflectance_532	Float_32	NoUnits	0.0…2.0	1	4
Perpendicular_Column_Reflectance_Uncertainty_532	Float_32	NoUnits	0.0…TBD	1	4
Perpendicular_Column_Reflectance_RMS_Variation_532	Float_32	NoUnits	0.0…TBD	1	4
Column_Integrated_Attenuated_Backscatter_532	Float_32	sr^{-1}	0.0…2.0	1	4
Column_IAB_Cumulative_Probability	Float_32	NoUnits	0.0…1.0	1	4
Column_Optical_Depth_Cloud_532	Float_32	NoUnits	0.0…5[M]	1	4
Column_Optical_Depth_Cloud_Uncertainty_532	Float_32	NoUnits	0.0…99.99[M]	1	4
Column_Optical_Depth_Aerosols_532	Float_32	NoUnits	0.0…3[M]	1	4
Column_Optical_Depth_Aerosols_Uncertainty_532	Float_32	NoUnits	0.0…99.99	1	4
Column_Optical_Depth_Stratospheric_532	Float_32	NoUnits	0.0…3[M]	1	4

Column_Optical_Depth_Stratospheric_Uncertainty_532	Float_32	NoUnits	0.0…99.99	1	4
Column_Optical_Depth_Aerosols_1064	Float_32	NoUnits	0.0…3[M]	1	4
Column_Optical_Depth_Aerosols_Uncertainty_1064	Float_32	NoUnits	0.0…99.99	1	4
Column_Optical_Depth_Stratospheric_1064	Float_32	NoUnits	0.0…3[M]	1	4
Column_Optical_Depth_Stratospheric_Uncertainty_1064	Float_32	NoUnits	0.0…99.99	1	4
Column_Feature_Fraction	Float_32	NoUnits	0.0…1.0	1	4
Tropopause_Height	Float_32	km	4.0…22.0	1	4
Tropopause_Temperature	Float_32	ºC	-100.0…-20.0	1	4
IGBP_Surface_Type	Int_8	NoUnits	1…18	1	1
NSIDC_Surface_Type	UInt_8	NoUnits	0…255	1	1
Lidar_Surface_Elevation	Float_32	km	-1.0…9.0	8	32
DEM_Surface_Elevation	Float_32	km	-1.0…9.0	4	16
Surface_Elevation_Detection_Frequency	UInt_8	NoUnits	0…165	1	1
Normalization_Constant_Uncertainty	Float_32	NoUnits	0.0…1.0	2	8
FeatureFinderQC	UInt_16	NoUnits	0…32,767	1	2
Calibration_Altitude_532	Float_32	km	0.0…40.0	2	8
Number_Layers_Found	Int_8	NoUnits	0…10	1	1
Record Size (bytes)					**323**

C) International Atomic Time (TAI) seconds from Jan. 1, 1993

D) TAI time converted to UTC time and stored in format: yymmdd.ffffffff

L) Spacecraft_Position is a 3x3 array which includes the position for the three latitudes

M) Column optical depths will occasionally exceed the maximum value cited here. Users are advised that these especially large values are numerical artifacts of the retrieval process, and do not represent realistic, physically meaningful retrievals.

Table 32: Lidar 5 km Layer Descriptor Record: Clouds

Parameter	Data Type	Units	Nominal Range	Elem/ Rec	Bytes
Layer_Top_Altitude	Float_32	km	-0.5…30.1	10	40
Layer_Base_Altitude	Float_32	km	-0.5…30.1	10	40
Layer_Base_Extended	UInt_16	NoUnits	1…49,146	10	20
Layer_Top_Pressure	Float_32	hPa	1.0…1086.0	10	40
Midlayer_Pressure	Float_32	hPa	1.0…1086.0	10	40
Layer_Base_Pressure	Float_32	hPa	1.0…1086.0	10	40
Layer_Top_Temperature	Float_32	ºC	-110.0…60.0	10	40
Midlayer_Temperature	Float_32	ºC	-110.0…60.0	10	40
Layer_Base_Temperature	Float_32	ºC	-110.0…60.0	10	40
Opacity_Flag	Int_8	NoUnits	0…1	10	10
Horizontal_Averaging	Int_8	km	5…80	10	10
Single_Shot_Cloud_Cleared_Fraction	Float_32	NoUnits	0.0…1.0	10	40
Attenuated_Backscatter_Statistics_532	Float_32	km^{-1} sr^{-1}	N/A	60	240
Integrated_Attenuated_Backscatter_532	Float_32	sr^{-1}	0.0…1.8	10	40
Integrated_Attenuated_Backscatter_Uncertainty_532	Float_32	sr^{-1}	0.0…0.5	10	40
Attenuated_Backscatter_Statistics_1064	Float_32	km^{-1} sr^{-1}	N/A	60	240
Integrated_Attenuated_Backscatter_1064	Float_32	sr^{-1}	0.0…1.8[K]	10	40
Integrated_Attenuated_Backscatter_Uncertainty_1064	Float_32	sr^{-1}	0.0…0.5	10	40
Volume_Depolarization_Ratio_Statistics	Float_32	NoUnits	N/A	60	240
Integrated_Volume_Depolarization_Ratio [L]	Float_32	NoUnits	0.0…1.0	10	40
Integrated_Volume_Depolarization_Ratio_Uncertainty	Float_32	NoUnits	0.0…2.0	10	40
Attenuated_Total_Color_Ratio_Statistics	Float_32	NoUnits	N/A	60	240
Integrated_Attenuated_Total_Color_Ratio [L]	Float_32	NoUnits	0.0…2.0	10	40
Integrated_Attenuated_Total_Color_Ratio_Uncertainty	Float_32	NoUnits	0.0…3.0	10	40
Overlying_Integrated_Attenuated_Backscatter_532	Float_32	sr^{-1}	0.0…2.0	10	40
Layer_IAB_QA_Factor	Float_32	NoUnits	0.0…1.0	10	40
Feature_Classification_Flags[J]	UInt_16	NoUnits	1…49,146	10	20
ExtinctionQC_532	UInt_16	NoUnits	0…32,768	10	20
CAD_Score	Int_8	NoUnits	-101…105	10	10
Measured_Two_Way_Transmittance_532	Float_32	NoUnits	0.0…1.0	10	40
Measured_Two_Way_Transmittance_Uncertainty_532	Float_32	NoUnits	0.0…1.5	10	40
Two_Way_Transmittance_Measurement_Region	Float_32	km	0.0…30.0	20	80
Feature_Optical_Depth_532	Float_32	NoUnits	0.0…5.0	10	40
Feature_Optical_Depth_Uncertainty_532	Float_32	NoUnits	0.0…TBD	10	40
Initial_532_Lidar_Ratio	Float_32	sr	19.0…25.0	10	40
Final_532_Lidar_Ratio	Float_32	sr	0.0…250.0	10	40
Lidar_Ratio_532_Selection_Method	Int_8	NoUnits	0.0…5.0	10	10
Layer_Effective_532_Multiple_Scattering_Factor	Float_32	NoUnits	0.6	10	40
Integrated_Particulate_Depolarization_Ratio	Float_32	NoUnits	0.0…1.0	10	40
Integrated_Particulate_Depolarization_Ratio_Uncertainty	Float_32	NoUnits	0.0…99.9	10	40
Particulate_Depolarization_Ratio_Statistics	Float_32	NoUnits	N/A	60	240
Cirrus_Shape_Parameter	Int_16	NoUnits	N/A	40	80
Cirrus_Shape_Parameter_Uncertainty	Int_16	NoUnits	N/A	40	80
Cirrus_Shape_Parameter_Invalid_Points	Int_16	NoUnits	N/A	10	20
Ice_Water_Path	Float_32	g/m^2	0.0…200.0	10	40
Ice_Water_Path_Uncertainty	Float_32	g/m^2	0.0…99.99	10	40
Record Size (bytes)					**2,760**

J) Refer to Table 44 for a detailed description of this parameter

K) While zero is the physically meaningful lower limit, small negative values may result due to noise in weak signals
L) Notes for depolarization and color ratio fields: Based solely on physical considerations, the expected range for the integrated volume depolarization ratio is between 0 and 1. The range for integrated attenuated total color ratio is less certain, but should fall between 0 and 2. However, because these quantities are computed as the ratio of two noisy numbers, the expected ranges might be exceeded for weakly scattering features or when the overlying attenuation is high.
Note: The first 32 parameters in Tables 32 and 34 (5 km Layer Descriptor Record for Aerosols) are identical.

Table 33: Lidar 5 km Column Descriptor Record: Aerosols

Parameter	Data Type	Units	Nominal Range	Elem/ Rec	Bytes
Profile_ID	Int_32	NoUnits	1…3,153,600,000	2	8
Latitude	Float_32	deg	-90.0…90.0	3	12
Longitude	Float_32	deg	-180.0…180.0	3	12
Profile_Time[C]	Float_64	sec	4.204E8…7.389E8	3	24
Profile_UTC_Time[D]	Float_64	NoUnits	60,426.0…160,601.0	3	24
Day_Night_Flag	Int_8	NoUnits	0…1	1	1
Off_Nadir_Angle	Float_32	deg	0.0…5.0	1	4
Solar_Zenith_Angle	Float_32	deg	0.0…180.0	1	4
Solar_Azimuth_Angle	Float_32	deg	-180.0…180.0	1	4
Scattering_Angle	Float_32	deg	0.0…180.0	1	4
Spacecraft_Position[L]	Float_64	km	-8,000.0…8,000.0	9	72
Parallel_Column_Reflectance_532	Float_32	NoUnits	0.0…2.0	1	4
Parallel_Column_Reflectance_Uncertainty_532	Float_32	NoUnits	0.0…TBD	1	4
Parallel_Column_Reflectance_RMS_Variation_532	Float_32	NoUnits	0.0…TBD	1	4
Perpendicular_Column_Reflectance_532	Float_32	NoUnits	0.0…2.0	1	4
Perpendicular_Column_Reflectance_Uncertainty_532	Float_32	NoUnits	0.0…TBD	1	4
Perpendicular_Column_Reflectance_RMS_Variation_532	Float_32	NoUnits	0.0…TBD	1	4
Column_Integrated_Attenuated_Backscatter_532	Float_32	sr^{-1}	0.0…2.0	1	4
Column_IAB_Cumulative_Probability	Float_32	NoUnits	0.0…1.0	1	4
Column_Optical_Depth_Cloud_532	Float_32	NoUnits	0.0…5.0[M]	1	4
Column_Optical_Depth_Cloud_Uncertainty_532	Float_32	NoUnits	0.0…99.99	1	4
Column_Optical_Depth_Aerosols_532	Float_32	NoUnits	0.0…3.0[M]	1	4
Column_Optical_Depth_Aerosols_Uncertainty_532	Float_32	NoUnits	0.0…99.99	1	4
Column_Optical_Depth_Stratospheric_532	Float_32	NoUnits	0.0…3.0[M]	1	4
Column_Optical_Depth_Stratospheric_Uncertainty_532	Float_32	NoUnits	0.0…99.99	1	4
Column_Optical_Depth_Aerosols_1064	Float_32	NoUnits	0.0…3.0[M]	1	4
Column_Optical_Depth_Aerosols_Uncertainty_1064	Float_32	NoUnits	0.0…99.99	1	4
Column_Optical_Depth_Stratospheric_1064	Float_32	NoUnits	0.0…3.0[M]	1	4
Column_Optical_Depth_Stratospheric_Uncertainty_1064	Float_32	NoUnits	0.0…99.99	1	4
Column_Feature_Fraction	Float_32	NoUnits	0.0…1.0	1	4
Tropopause_Height	Float_32	km	4.0…22.0	1	4
Tropopause_Temperature	Float_32	ºC	-100.0…-20.0	1	4
IGBP_Surface_Type	Int_8	NoUnits	1…18	1	1
NSIDC_Surface_Type	UInt_8	NoUnits	0…255	1	1
Lidar_Surface_Elevation	Float_32	km	-1.0…9.0	8	32
DEM_Surface_Elevation	Float_32	km	-1.0…9.0	4	16
Surface_Elevation_Detection_Frequency	UInt_8	NoUnits	0…165	1	1
Normalization_Constant_Uncertainty	Float_32	NoUnits	0.0…1.0	2	8
Calibration_Altitude_532	Float_32	km	0.0…40.0	2	8
FeatureFinderQC	UInt_16	NoUnits	0…32,767	1	2
Number_Layers_Found	Int_8	NoUnits	0…8	1	1
Surface_Wind_Speed	Float_32	$m\ s^{-1}$	-80.0…80.0	2	8

Record Size (bytes)					**331**

3) International Atomic Time (TAI) seconds from Jan. 1, 1993
4) TAI time converted to UTC time and stored in format: yymmdd.ffffffff
L) Spacecraft_Position is a 3x3 array which includes the position for the three latitudes

Table 34: Lidar 5 km Layer Descriptor Record: Aerosols

Parameter	Data Type	Units	Nominal Range	Elem/ Rec	Bytes
Layer_Top_Altitude	Float_32	km	-0.5…30.1	8	32
Layer_Base_Altitude	Float_32	km	-0.5…30.1	8	32
Layer_Base_Extended	UInt_16	NoUnits	1…49,146	8	10
Layer_Top_Pressure	Float_32	hPa	1.0…1086.0	8	32
Midlayer_Pressure	Float_32	hPa	1.0…1086.0	8	32
Layer_Base_Pressure	Float_32	hPa	1.0…1086.0	8	32
Layer_Top_Temperature	Float_32	ºC	-110.0…60.0	8	32
Midlayer_Temperature	Float_32	ºC	-110.0…60.0	8	32
Layer_Base_Temperature	Float_32	ºC	-110.0…60.0	8	32
Opacity_Flag	Int_8	NoUnits	0…1	8	8
Horizontal_Averaging	Int_8	km	5…80	8	8
Attenuated_Backscatter_Statistics_532	Float_32	km^{-1} sr^{-1}	N/A	48	192
Integrated_Attenuated_Backscatter_532	Float_32	sr^{-1}	0.0…1.8	8	32
Integrated_Attenuated_Backscatter_Uncertainty_532	Float_32	sr^{-1}	0.0…0.5	8	32
Attenuated_Backscatter_Statistics_1064	Float_32	km^{-1} sr^{-1}	N/A	48	192
Integrated_Attenuated_Backscatter_1064	Float_32	sr^{-1}	0.0…1.8	8	32
Integrated_Attenuated_Backscatter_Uncertainty_1064	Float_32	sr^{-1}	0.0…0.5	8	32
Volume_Depolarization_Ratio_Statistics	Float_32	NoUnits	N/A	48	192
Integrated_Volume_Depolarization_Ratio [L]	Float_32	NoUnits	0.0…1.0	8	32
Integrated_Volume_Depolarization_Ratio_Uncertainty	Float_32	NoUnits	0.0…2.0	8	32
Attenuated_Total_Color_Ratio_Statistics	Float_32	NoUnits	N/A	48	192
Integrated_Attenuated_Total_Color_Ratio [L]	Float_32	NoUnits	0.0…2.0	8	32
Integrated_Attenuated_Total_Color_Ratio_Uncertainty	Float_32	NoUnits	0.0…3.0	8	32
Overlying_Integrated_Attenuated_Backscatter_532	Float_32	sr^{-1}	0.0…2.0	8	32
Layer_IAB_QA_Factor	Float_32	NoUnits	0.0…1.0	8	32
Feature_Classification_Flags[J]	UInt_16	NoUnits	1…49,146	8	16
ExtinctionQC_532	UInt_16	NoUnits	0…65,535	8	16
ExtinctionQC_1064	UInt_16	NoUnits	0…65,535	8	16
CAD_Score	Int_8	NoUnits	-101…105	8	8
Measured_Two_Way_Transmittance_532	Float_32	NoUnits	0.0…1.0[K]	8	32
Measured_Two_Way_Transmittance_Uncertainty_532	Float_32	NoUnits	0.0…TBD	8	32
Two_Way_Transmittance_Measurement_Region	Float_32	km	0.0…30.0	16	64
Feature_Optical_Depth_532	Float_32	NoUnits	0.0…3.0	8	32
Feature_Optical_Depth_Uncertainty_532	Float_32	NoUnits	0.0…TBD	8	32
Initial_532_Lidar_Ratio	Float_32	sr	20.0…70.0	8	32
Final_532_Lidar_Ratio	Float_32	sr	0.0…250.0	8	32
Lidar_Ratio_532_Selection_Method	Int_8	NoUnits	0…5	8	8
Layer_Effective_532_Multiple_Scattering_Factor	Float_32	NoUnits	1.0	8	32
Integrated_Particulate_Depolarization_Ratio	Float_32	NoUnits	0.0…1.0	8	32
Integrated_Particulate_Depolarization_Ratio_Uncertainty	Float_32	NoUnits	0.0…99.99	8	32
Particulate_Depolarization_Ratio_Statistics	Float_32	NoUnits	N/A	48	192
Feature_Optical_Depth_1064	Float_32	NoUnits	0.0…3.0	8	32
Feature_Optical_Depth_Uncertainty_1064	Float_32	NoUnits	0.0…TBD	8	32

Parameter	Data Type	Units	Nominal Range	Elem/ Rec	Bytes
Initial_1064_Lidar_Ratio	Float_32	sr	30.0…55.0	8	32
Final_1064_Lidar_Ratio	Float_32	sr	0.0…250.0	8	32
Lidar_Ratio_1064_Selection_Method	Int_8	NoUnits	0…5	8	8
Layer_Effective_1064_Multiple_Scattering_Factor	Float_32	NoUnits	1.0	8	32
Integrated_Particulate_Color_Ratio	Float_32	NoUnits	0.0…4.0	8	32
Integrated_Particulate_Color_Ratio_Uncertainty	Float_32	NoUnits	0.0…1.0	8	32
Particulate_Color_Ratio_Statistics	Float_32	NoUnits	N/A	48	192
Relative_Humidity	Float_32	%	0.0…150.0	8	32
Single_Shot_Cloud_Cleared_Fraction	Float_32	NoUnits	0.0…1.0	8	32
Record Size (bytes)					**2,466**

J) Refer to Table 44 for a detailed description of this parameter

K) While zero is the physically meaningful lower limit, small negative values may be encountered due to noise in weak signals

L) Notes for depolarization and color ratio fields: Based solely on physical considerations, the expected range for the integrated volume depolarization ratio is between 0 and 1. The range for integrated attenuated total color ratio is less certain, but should fall between 0 and 2. However, because these quantities are computed as the ratio of two noisy numbers, the expected ranges might be exceeded for weakly scattering features or when the overlying attenuation is high.

2.5 Lidar Level 2 Aerosol Profile Data Product DP 2.1B

The Lidar Level 2 Aerosol Profile data products contain averaged aerosol profile data and ancillary data. There are no layer descriptors included in the lidar aerosol profile data products. The spatial distribution of the aerosol layers is instead completely characterized by the *aerosol layer fraction* and *atmospheric volume description* parameters.

The aerosol profile products are generated at a uniform horizontal resolution of 5 km. The aerosol backscatter and extinction coefficients are computed using a lidar ratio selected by the CALIPSO Lidar Ratio selection algorithm (refer to the Scene Classification ATBD).

The data products are written in HDF. A summary of the product records is listed in Table 35.

The major categories of the data product are:

- Backscatter Profile Data
- Depolarization Profile Data
- Extinction Profile
- Ancillary Profile Data

Level: 2

Type: Archival

Frequency: 2/Orbit

Spatial Resolution Record:

60 m vertical resolution x 5 km

Along Track

Time Interval Covered:

File: Half Orbit (Day or Night)

Data File Names:

Table 35: CAL_LID_L2_5kmAProCal-ProductionStrategy-Version.Instance.hdf

Profile Vertical Resolution

Altitude Region		Vertical Resolution, meters	Samples per Profile
Base, km	**Top, km**		
-0.5	8.2	60	145
8.2	20.2	60	200
20.2	30.1	180	54
Total			**399**

2.5.1 Lidar Level 2 Aerosol Profile Data Summary

Table 35: Lidar Level 2 Aerosol Profile Data Record Summary

Record Name	Reference	Record Size	Records / File	File Size (bytes)
Core Metadata Record	Appendix A	870	1	870
Archive Metadata Record	Appendix A	4	1	4
Lidar Aerosol Metadata Record	Table 36	22,062	1	22,062
Lidar 5 km Aerosol Profile Record, CALIPSO Lidar Ratio (Nominal data product)	Table 37	36,067	4010	144,628,670
Total Size Aerosol Profile Product (bytes)				**144,651,606**
Total Size Aerosol Profile Product (Mbytes)				**137.951**

2.5.2 Lidar Aerosol Profile Data Metadata

The Lidar Aerosol Profile Data products include three Vdata record types (i.e., metadata), as specified in Table 35. Listings for the core metadata and the archive metadata are provided in Appendix A. The metadata parameters specific to the Lidar Level 2 Aerosol Profile Data Product are listed in Table 36.

Table 36: Lidar Level 2 Aerosol Profile Metadata Record

Parameter	Data Type	Units	Nominal Range	Elem/ Rec	Bytes
Product_ID	Char	NoUnits	L2_LIDAR	80	80
Date_Time_at_Granule_Start[A]	Char	NoUnits	4/2006 – 6/2016	27	27
Date_Time_at_Granule_End[A]	Char	NoUnits	4/2006 – 6/2016	27	27
Date_Time_of_Production[A]	Char	NoUnits	4/2006 – 6/2016	27	27
Number_of_Good_Profiles	Int_32	NoUnits	0…4,224	1	4
Number_of_Bad_Profiles	Int_32	NoUnits	0…4,224	1	4
Initial_Subsatellite_Latitude	Float_32	deg	-90.0…90.0	1	4
Initial_Subsatellite_Longitude	Float_32	deg	-180.0…180.0	1	4
Final_Subsatellite_Latitude	Float_32	deg	-90.0…90.0	1	4
Final_Subsatellite_Longitude	Float_32	deg	-180.0…180.0	1	4
Orbit_Number_at_Granule_Start	UInt_32	N/A	$1…2^{32}-1$	1	4
Orbit_Number_at_Granule_End	UInt_32	N/A	$1…2^{32}-1$	1	4
Orbit_Number_Change_Time[D]	Float_64	NoUnits	60,426.0…160,601.0	1	8
Path_Number_at_Granule_Start	Int_16	N/A	1…233	1	2
Path_Number_at_Granule_End	Int_16	N/A	1…233	1	2
Path_Number_Change_Time[D]	Float_64	NoUnits	60,426.0…160,601.0	1	8
Rayleigh_Extinction_Cross-section_532	Float_32	m^2	5.167E-31	1	4
Rayleigh_Extinction_Cross-section_1064	Float_32	m^2	3.127E-32	1	4
Rayleigh_Backscatter_Cross-section_532	Float_32	$m^2\ sr^{-1}$	5.930E-32	1	4
Rayleigh_Backscatter_Cross-section_1064	Float_32	$m^2\ sr^{-1}$	3.592E-33	1	4
Ozone_Absorption_Cross-section_532	Float_32	m^2	2.728461E-25	1	4
Ozone_Absorption _Cross-section_1064	Float_32	m^2	0.0	1	4
Lidar_L1_Production_Date_Time[A]	Char	yymmdd	4/2006 – 6/2016	27	27
Lidar_Data_Altitudes	Float_32	km	-0.5…30.0	399	1596
Initial_Lidar_Ratio_Aerosols_532	Float_32	sr	20.0…70.0	8	32
Initial_Lidar_Ratio_Stratosphere_532	Float_32	sr	25.0	8	32
Initial_Lidar_Ratio_Aerosols_1064	Float_32	sr	30.0…55.0	8	32
Initial_Lidar_Ratio_Stratosphere_1064	Float_32	sr	25.0	8	32

GEOS_Version	Char	NoUnits	N/A	64	64
Classifier_Coefficients_Version_Number	Char	NoUnits	0.0…99.9	1	4
Classifier_Coefficients_Version_Date	Char	yymmdd	4/2006 – 6/2016	1	6
Production_Script	Char	NoUnits	N/A	20,000	20,000
Record Size (bytes)					**22,062**

A) UTC CCSDS ASCII Time Code Format A

D) TAI time converted to UTC time and stored in format: yymmdd.ffffffff

2.5.3 Lidar Aerosol Profile Data Scientific Data Sets

Table 37 summarizes the contents of each scientific data set (SDS) contained within the Lidar Aerosol Profile Data products. Each parameter is listed using the same SDS name that is used in the respective HDF files. Units are given for each parameter, as is the range of valid data values.

Table 37: Lidar 5 km Aerosol Profile Record

Parameter	Data Type	Units	Nominal Range	Elem/ Rec	Bytes
Latitude	Float_32	deg	-90.0…90.0	3	12
Longitude	Float_32	deg	-180.0…180.0	3	12
Profile_Time[C]	Float_64	sec	4.204E8…7.389E8	3	24
Profile_UTC	Float_64	NoUnits	60,426.0…160,601.0	3	24
Day_Night_Flag	Int_8	NoUnits	0…1	1	1
Column_Optical_Depth_Cloud_532	Float_32	NoUnits	0.0…5.0[M]	1	4
Column_Optical_Depth_Cloud_Uncertainty_532	Float_32	NoUnits	0.0…99.99	1	4
Column_Optical_Depth_Aerosols_532	Float_32	NoUnits	0.0…3.0[M]	1	4
Column_Optical_Depth_Aerosols_Uncertainty_532	Float_32	NoUnits	0.0…99.99	1	4
Column_Optical_Depth_Stratospheric_532	Float_32	NoUnits	0.0…3.0[M]	1	4
Column_Optical_Depth_Stratospheric_Uncertainty_532	Float_32	NoUnits	0.0…99.99	1	4
Column_Optical_Depth_Aerosols_1064	Float_32	NoUnits	0.0…3.0[M]	1	4
Column_Optical_Depth_Aerosols_Uncertainty_1064	Float_32	NoUnits	0.0…99.99	1	4
Column_Optical_Depth_Stratospheric_1064	Float_32	NoUnits	0.0…3.0[M]	1	4
Column_Optical_Depth_Stratospheric_Uncertainty_1064	Float_32	NoUnits	0.0…99.99	1	4
Column_Feature_Fraction	Float_32	NoUnits	0.0…1.0	1	4
Column_Integrated_Attenuated_Backscatter_532	Float_32	sr^{-1}	0.0…2.0	1	4
Column_IAB_Cumulative_Probability	Float_32	NoUnits	0.0…1.0	1	4
Tropopause_Height	Float_32	km	4.0…22.0	1	4
Tropopause_Temperature	Float_32	°C	-100.0…-20.0	1	4
Temperature	Float_32	°C	-120.0…60.0	399	1,596
Pressure	Float_32	hPa	1.0…1086.0	399	1,596
Molecular_Number_Density	Float_32	m^{-3}	$8x10^{22}…5x10^{25}$	399	1,596
Relative_Humidity	Float_32	%	0.0…150.0	399	1,596
Surface_Elevation_Statistics	Float_32	km	-1.0…9.0	4	16
Surface_Winds	Float_32	$m\ s^{-1}$	-80.0…80.0	2	8
Samples_Averaged	Int_16	NoUnits	0…480	399	798
Aerosol_Layer_Fraction	UInt_8	NoUnits	0…30	399	399
Cloud_Layer_Fraction	UInt_8	NoUnits	0…30	399	399
Atmospheric_Volume_Description	UInt_16	NoUnits	1…49,146	399x2	1,596
Extinction_QC_Flag_532	UInt_16	NoUnits	0…32,768	399x2	1,596
Extinction_QC_Flag_1064	UInt_16	NoUnits	0…32,768	399x2	1,596
CAD_Score	Int_8	NoUnits	-101…105	399x2	798
Total_Backscatter_Coefficient_532	Float_32	$sr^{-1}\ km^{-1}$	0.0…0.05	399	1,596
Total_Backscatter_Coefficient_Uncertainty_532	Float_32	$sr^{-1}\ km^{-1}$	0.0…99.99	399	1,596
Perpendicular_Backscatter_Coefficient_532	Float_32	$sr^{-1}\ km^{-1}$	0.0…0.01	399	1,596
Perpendicular_Backscatter_Coefficient_Uncertainty_532	Float_32	$sr^{-1}\ km^{-1}$	0.0…99.99	399	1,596
Particulate_Depolarization_Ratio_Profile_532	Float_32	NoUnits	0.0…1.0	399	1,596
Particulate_Depolarization_Ratio_Uncertainty_532	Float_32	NoUnits	0.0…99.99	399	1,596
Extinction_Coefficient_532	Float_32	km^{-1}	0.0…1.25	399	1,596
Extinction_Coefficient_Uncertainty_532	Float_32	km^{-1}	0.0…99.99	399	1,596
Aerosol_Multiple_Scattering_Profile_532	Float_32	NoUnits	1.0	399	1,596
Backscatter_Coefficient_1064	Float_32	$sr^{-1}\ km^{-1}$	0.0…0.03	399	1,596

Parameter	Data Type	Units	Nominal Range	Elem/ Rec	Bytes
Backscatter_Coefficient_Uncertainty_1064	Float_32	sr^{-1} km^{-1}	0.0…99.99	399	1,596
Extinction_Coefficient_1064	Float_32	km^{-1}	0.0…1.0	399	1,596
Extinction_Coefficient_Uncertainty_1064	Float_32	km^{-1}	0.0…99.99	399	1,596
Aerosol_Multiple_Scattering_Profile_1064	Float_32	NoUnits	1.0	399	1,596
Record Size (bytes)					**36,067**

C) International Atomic Time (TAI) seconds from Jan. 1, 1993

2.6 Lidar Level 2 Cloud Profile Data Product DP 2.1C

The Lidar Level 2 Cloud Profile data product contains cloud profile data and ancillary data. The cloud profile product is produced at 5 km horizontal resolution and is written in HDF. A summary of the product records is listed in Table 38.

Note that there is no atmospheric volume characterization associated with the cloud profile products. Also, the 1064 calibration scheme assumes that both the extinction and the backscatter from clouds are spectrally independent. Consistent with this assumption, extinction and backscatter profiles will be reported for clouds only at 532 nm.

Additionally, it is important to note that the aerosol profile product extends upward to 30.1 km, while the cloud profile product ceases at 20.2. Therefore, users interested in polar stratospheric clouds will need to order the aerosol profile data product.

The major categories of the cloud profile data product are:

- Backscatter Profile Data
- Depolarization Profile Data
- Extinction Profile
- Ice Water Content
- Ancillary Profile Data

Level: 2

Type: Archival

Frequency: 2/Orbit

Spatial Resolution Record:

60m vertical resolution

5 km Along Track

Time Interval Covered:

File: Half Orbit (Day or Night)

Data File Name:

Table 38: CAL_LID_L2_05kmCPro-ProductionStrategy-Version.Instance.hdf

Profile Vertical Resolution

Altitude Region		Vertical Resolution, meters	Samples per Profile
Base, km	Top, km		
-0.5	8.2	60	145
8.2	20.2	60	200
Total			**345**

2.6.1 Lidar Cloud Profile Data Record Summary

Table 38: Lidar Cloud Profile Data Record Summary

Record Name	Reference	Record Size	Records/File	File Size (bytes)
Core Metadata Record	Appendix A	870	1	870
Archive Metadata Record	Appendix A	4	1	4
Lidar Cloud Metadata Record	Table 39	21,726	1	21,726
Lidar 5 km Cloud Profile Record	Table 40	25,687	4,010	103,004,870
Total Cloud Profile Product (bytes)				**103,027,470**
Total Size Cloud Profile Product (Mbytes)				**98.255**

2.6.2 Lidar Cloud Profile Data Metadata

Lidar Cloud Profile Data Products include three Vdata record types (i.e., metadata), as specified in Table 38. Listings for the core metadata and the archive metadata are provided in Appendix A. The metadata parameters specific to the Lidar Cloud Profile Data Product are listed in Table 39.

Table 39: Lidar Cloud Profile Metadata Record

Parameter	Data Type	Units	Nominal Range	Elem/ Rec	Bytes
Product_ID	Char	NoUnits	L2_LIDAR	80	80
Date_Time_at_Granule_Start[A]	Char	NoUnits	4/2006 – 6/2016	27	27
Date_Time_at_Granule_End[A]	Char	NoUnits	4/2006 – 6/2016	27	27
Date_Time_of_Production[A]	Char	NoUnits	4/2006 – 6/2016	27	27
Number_of_Good_Profiles	Int_32	NoUnits	0…2,005	1	4
Number_of_Bad_Profiles	Int_32	NoUnits	0…2,005	1	4
Initial_Subsatellite_Latitude	Float_32	deg	-90.0…90.0	1	4
Initial_Subsatellite_Longitude	Float_32	deg	-180.0…180.0	1	4
Final_Subsatellite_Latitude	Float_32	deg	-90.0…90.0	1	4
Final_Subsatellite_Longitude	Float_32	deg	-180.0…180.0	1	4
Orbit_Number_at_Granule_Start	UInt_32	N/A	$1…2^{32}-1$	1	4
Orbit_Number_at_Granule_End	UInt_32	N/A	$1…2^{32}-1$	1	4
Orbit_Number_Change_Time[D]	Float_64	NoUnits	60,426.0…160,601.0	1	8
Path_Number_at_Granule_Start	Int_16	N/A	1…233	1	2
Path_Number_at_Granule_End	Int_16	N/A	1…233	1	2
Path_Number_Change_Time[D]	Float_64	NoUnits	60,426.0…160,601.0	1	8
Rayleigh_Extinction_Cross-section_532	Float_32	m^2	5.167E-31	1	4
Rayleigh_Extinction_Cross-section_1064	Float_32	m^2	3.127E-32	1	4
Rayleigh_Backscatter_Cross-section_532	Float_32	$m^2\ sr^{-1}$	5.930E-32	1	4
Rayleigh_Backscatter_Cross-section_1064	Float_32	$m^2\ sr^{-1}$	3.592E-33	1	4
Ozone_Absorption_Cross-section_532	Float_32	m^2	2.728461E-25	1	4
Ozone_Absorption _Cross-section_1064	Float_32	m^2	0.0	1	4
Lidar_L1_Production_Date_Time[A]	Char	yymmdd	4/2006 – 6/2016	27	27
Lidar_Data_Altitudes	Float_32	km	-0.480…20.175	345	1,380
Initial_Lidar_Ratio_Clouds_532	Float_32	sr	19.0…25.0	2	8
GEOS_Version	Char	NoUnits	N/A	64	64
Classifier_Coefficients_Version_Number	Char	NoUnits	0.0…99.9	1	4
Classifier_Coefficients_Version_Date	Char	yymmdd	4/2006 – 6/2016	1	6
Production_Script	Char	NoUnits	N/A	20,000	20,000

Record Size (bytes)					**21,726**

A) CCSDS ASCII Time Code Format A

D) TAI time converted to UTC time and stored in format: yymmdd.ffffffff

2.6.3 Lidar Cloud Profile Scientific Data Sets

Table 40 summarizes the contents of each scientific data set (SDS) contained within the Lidar Cloud Profile Data products. Each parameter is listed using the same SDS name that is used in the respective HDF files. Units are given for each parameter, as is the range of valid data values.

Table 40: Lidar 5 km Cloud Profile Record

Parameter	Data Type	Units	Nominal Range	Elem/ Rec	Bytes
Latitude	Float_32	deg	-90.0…90.0	3	12
Longitude	Float_32	deg	-180.0…180.0	3	12
Profile_Time[C]	Float_64	sec	4.204E8…7.389E8	3	24
Profile_UTC	Float_64	NoUnits	60,426.0…160,601.0	3	24
Day_Night_Flag	Int_8	NoUnits	0…1	1	1
Column_Optical_Depth_Cloud_532	Float_32	NoUnits	0.0…5.0[M]	1	4
Column_Optical_Depth_Cloud_Uncertainty_532	Float_32	NoUnits	0.0…99.99	1	4
Column_Optical_Depth_Aerosols_532	Float_32	NoUnits	0.0…3.0[M]	1	4
Column_Optical_Depth_Aerosols_Uncertainty_532	Float_32	NoUnits	0.0…99.99	1	4
Column_Optical_Depth_Stratospheric_532	Float_32	NoUnits	0.0…3.0[M]	1	4
Column_Optical_Depth_Stratospheric_Uncertainty_532	Float_32	NoUnits	0.0…99.99	1	4
Column_Optical_Depth_Aerosols_1064	Float_32	NoUnits	0.0…3.0[M]	1	4
Column_Optical_Depth_Aerosols_Uncertainty_1064	Float_32	NoUnits	0.0…99.99	1	4
Column_Optical_Depth_Stratospheric_1064	Float_32	NoUnits	0.0…3.0[M]	1	4
Column_Optical_Depth_Stratospheric_Uncertainty_1064	Float_32	NoUnits	0.0…99.99	1	4
Column_Feature_Fraction	Float_32	NoUnits	0.0…1.0	1	4
Column_Integrated_Attenuated_Backscatter_532	Float_32	sr^{-1}	0.0…2.0	1	4
Column_IAB_Cumulative_Probability	Float_32	NoUnits	0.0…1.0	1	4
Tropopause_Height	Float_32	km	4.0…22.0	1	4
Tropopause_Temperature	Float_32	°C	-100.0…-20.0	1	4
Temperature	Float_32	°C	-120.0…60.0	345	1,380
Pressure	Float_32	hPa	1.0…1086.0	345	1,380
Molecular_Number_Density	Float_32	m^{-3}	$8x10^{22}…5x10^{25}$	345	1,380
Relative_Humidity	Float_32	%	0.0…150.0	345	1,380
Surface_Elevation_Statistics	Float_32	km	-1.0…9.0	4	16
Surface_Winds	Float_32	ms^{-1}	-80.0…80.0	2	8
Samples_Averaged	Int_16	NoUnits	0…480	345	690
Aerosol_Layer_Fraction	UInt_8	NoUnits	0…30	345	345
Cloud_Layer_Fraction	UInt_8	NoUnits	0…30	345	345
Atmospheric_Volume_Description	UInt_16	NoUnits	1…49,146	345x2	1,380
Extinction_QC_Flag_532	UInt_16	NoUnits	0…32,768	345x2	1,380
CAD_Score	Int_8	NoUnits	-101…105	345x2	690
Total_Backscatter_Coefficient_532	Float_32	sr^{-1} km^{-1}	0.0…1.5	345	1,380
Total_Backscatter_Coefficient_Uncertainty_532	Float_32	sr^{-1} km^{-1}	0.0…99.99	345	1,380
Perpendicular_Backscatter_Coefficient_532	Float_32	sr^{-1} km^{-1}	0.0…0.35	345	1,380
Perpendicular_Backscatter_Coefficient_Uncertainty_532	Float_32	sr^{-1} km^{-1}	0.0…99.99	345	1,380
Particulate_Depolarization_Ratio_Profile_532	Float_32	NoUnits	0.0…1.0	345	1,380
Particulate_Depolarization_Ratio_Uncertainty_532	Float_32	NoUnits	0.0…99.99	345	1,380
Extinction_Coefficient_532	Float_32	km^{-1}	0.0…12.0	345	1,380
Extinction_Coefficient_Uncertainty_532	Float_32	km^{-1}	0.0…99.99	345	1,380
Cloud_Multiple_Scattering_Profile_532	Float_32	NoUnits	0.5…1.0	345	1,380
Ice_Water_Content_Profile	Float_32	$g\ m^{-3}$	0.0…0.54	345	1,380
Ice_Water_Content_Profile_Uncertainty	Float_32	$g\ m^{-3}$	0.0…99.99	345	1,380

Parameter	Data Type	Units	Nominal Range	Elem/ Rec	Bytes
Record Size (bytes)					**25,687**

C) International Atomic Time (TAI) seconds from Jan. 1, 1993

2.7 Lidar Level 2 Vertical Feature Mask Data Product DP 2.1D

The Lidar Level 2 Vertical Feature Mask data product contains scene classification data and lidar lighting and land/water indicators. The feature mask product is written in HDF. A summary of the product records is listed in Table 41.

The spatial resolution for this product varies as a function of altitude, with the highest spatial resolutions occurring at the lowest altitudes. The table below provides a description of the data resolutions used in the vertical feature mask product.

Each 5 km horizontal segment of data contains one 16-bit integer for each lidar altitude resolution element. Each of these integers is a bit-mapped set of feature classification flags that provide a comprehensive overview of the CALIPSO measurements at the highest possible spatial resolution. The descriptive information contained within these feature classification flags is described in detail in Table 44.

The major categories contained within the data product are:

- Day/Night Flag
- Land/Water Flag
- Scene Classification Data

Level: 2

Type: Archival

Frequency: 2/Orbit

Spatial Resolution Record:

Single shot, full resolution

Time Interval Covered:

File: Half Orbit (Day or Night)

Data File Name:

Table 41: CAL_LID_L2_VFM-ProductionStrategy-Version.Instance.hdf

Profile Spatial Resolution

Altitude Region		Vertical Resolution (meters)	Horizontal Resolution (meters)	Profiles per 5 km	Samples per Profile
Base (km)	Top (km)				
-0.5	8.2	30	333	15	290
8.2	20.2	60	1,000	5	200
20.2	30.1	180	1,667	3	55
Total					**545**

2.7.1 Lidar Vertical Feature Mask Data Record Summary

Table 41: Lidar Vertical Feature Mask Data Record Summary

Record Name	Reference	Record Size	Records/ File	File Size (bytes)
Core Metadata Record	Appendix A	870	1	870
Archive Metadata Record	Appendix A	4	1	4
Lidar Vertical Cloud Mask Metadata Record	Table 42	22,646	1	22,646
Lidar 5 km Vertical Feature Mask Record	Table 43	11,081	4,010	44,434,810
Total Size Vertical Cloud Mask Product (bytes)				**44,458,330**
Total Size Vertical Cloud Mask Product (Mbytes)				**42.399**

2.7.2 Lidar Vertical Feature Mask Metadata

The Lidar Vertical Feature Mask products include three Vdata record types (i.e., metadata), as shown in Table 41. Listings for the core metadata and the archive metadata are provided in Appendix A. The metadata parameters specific to the Lidar Vertical Feature Mask Product are listed in Table 42.

Table 42: Lidar Vertical Feature Mask Metadata Record

Parameter	Data Type	Units	Nominal Range	Elem/Rec	Bytes
Product_ID	Char	NoUnits	L2_LIDAR	80	80
Date_Time_at_Granule_Start[A]	Char	NoUnits	4/2006 – 6/2016	27	27
Date_Time_at_Granule_End[A]	Char	NoUnits	4/2006 – 6/2016	27	27
Date_Time_of_Production[A]	Char	NoUnits	4/2006 – 6/2016	27	27
Lidar_L1_Production_Date_Time[A]	Char	NoUnits	4/2006…6/2016	27	27
Number_of_Good_Profiles	Int_32	NoUnits	0…2,005	1	4
Number_of_Bad_Profiles	Int_32	NoUnits	0…2,005	1	4
Initial_Subsatellite_Latitude	Float_32	deg	-90.0…90.0	1	4
Initial_Subsatellite_Longitude	Float_32	deg	-180.0…180.0	1	4
Final_Subsatellite_Latitude	Float_32	deg	-90.0…90.0	1	4
Final_Subsatellite_Longitude	Float_32	deg	-180.0…180.0	1	4
Orbit_Number_at_Granule_Start	UInt_32	N/A	$1…2^{32}-1$	1	4
Orbit_Number_at_Granule_End	UInt_32	N/A	$1…2^{32}-1$	1	4
Orbit_Number_Change_Time[D]	Float_64	NoUnits	60,426.0…160,601.0	1	8
Path_Number_at_Granule_Start	Int_16	N/A	1…233	1	2
Path_Number_at_Granule_End	Int_16	N/A	1…233	1	2
Path_Number_Change_Time[D]	Float_64	NoUnits	60,426.0…160,601.0	1	8
Lidar_Data_Altitudes	Float_32	km	-2.0…40.0	583	2,332
GEOS_Version	Char	NoUnits	N/A	64	64
Classifier_Coefficients_Version_Number	Char	NoUnits	0.0…99.9	1	4
Classifier_Coefficients_Version_Date	Char	yymmdd	4/2006…6/2016	1	6
Production_Script	Char	NoUnits	N/A	20,000	20,000
Record Size (bytes)					**22,646**

A) UTC CCSDS ASCII Time Code Format A
D) TAI time converted to UTC time and stored in format: yymmdd.ffffffff

2.7.3 Lidar Vertical Feature Mask Scientific Data Sets

Table 43 summarizes the contents of each scientific data set (SDS) contained within the Lidar Vertical Feature Mask products. Each parameter is listed using the same SDS name that is used in the respective HDF files. Units are given for each parameter, as is the range of valid data values.

Table 43: Lidar Vertical Feature Mask Record

Parameter	Data Type	Units	Nominal Range	Elem/Rec	Bytes
Latitude	Float_32	deg	-90.0…90.0	1	4
Longitude	Float_32	deg	-180.0…180.0	1	4
Profile_Time[C]	Float_64	sec	4.204E8…7.389E8	1	8
Profile_UTC_Time[D]	Float_64	NoUnits	60,426.0…160,601.0	1	8
Day_Night_Flag	UInt_16	NoUnits	0…1	1	2
Land_Water_Mask	Int_8	NoUnits	0…7	1	1
Spacecraft_Position	Float_64	km	-8000.0…8000.0	3	24
Feature_Classification_Flags[J]	UInt_16	NoUnits	1…49,146	5,515	11,030
Record Size (bytes)					**11,081**

C) International Atomic Time (TAI) seconds from Jan. 1, 1993
D) TAI time converted to UTC time and stored in format: yymmdd.ffffffff
J) Refer to Table 44 for a detailed description of this parameter

Table 44: Feature Classification Flag Definition

Bit(s)	Field Description	Bit Interpretation
1-3	Feature Type	0 = invalid (bad or missing data) 1 = "clear air" 2 = cloud 3 = aerosol 4 = stratospheric feature; polar stratospheric cloud (PSC) or stratospheric aerosol 5 = surface 6 = subsurface 7 = no signal (totally attenuated)
4-5	Feature Type QA	0 = none 1 = low 2 = medium 3 = high
6-7	Ice/Water Phase	0 = unknown/not determined 1 = ice 2 = water 3 = oriented ice crystals
8-9	Ice/Water Phase QA	0 = none 1 = low 2 = medium 3 = high
10-12	Feature Sub-type	

Bit(s)	Field Description	Bit Interpretation
	If feature type = aerosol, bits 10-12 will specify the aerosol type.	0 = not determined 1 = clean marine 2 = dust 3 = polluted continental 4 = clean continental 5 = polluted dust 6 = smoke 7 = other
	If feature type = cloud, bits 10-12 will specify the cloud type.	0 = low overcast, transparent 1 = low overcast, opaque 2 = transition stratocumulus 3 = low, broken cumulus 4 = altocumulus (transparent) 5 = altostratus (opaque) 6 = cirrus (transparent) 7 = deep convective (opaque)
	If feature type = Polar Stratospheric Cloud, bits 10-12 will specify PSC classification.	0 = not determined 1 = non-depolarizing PSC 2 = depolarizing PSC 3 = non-depolarizing aerosol 4 = depolarizing aerosol 5 = spare 6 = spare 7 = other
13	Cloud/Aerosol/PSC Type QA	0 = not confident 1 = confident
14-16	Horizontal averaging required for detection (provides a course measure of feature backscatter intensity)	0 = not applicable 1 = 1/3 km 2 = 1 km 3 = 5 km 4 = 20 km 5 = 80 km

2.8 IIR/Lidar Track Product DP 2.2A

The IIR/Lidar Level 2 Track data product contains IIR emissivity and cloud particle data related to pixels that have been co-located to the Lidar track. The Level 2 data product is written in HDF. The records are listed in Table 45.

The major categories of the data product are:

- Cloud Emissivity
- Cloud Properties
- Lidar Profile Data

Level: 2

Type: Archival

Frequency: 2/Orbit

Spatial Resolution Record:

1 km pixels at nadir

Time Interval Covered:

File: Half Orbit (Day or Night)

Data File Name:

Table 45: CAL_IIR_L2_Track-ProductionStrategy-Version.Instance.hdf

2.8.1 IIR/Lidar Track Product

Image data are registered to a 1 km grid centered on the lidar track. Each grid line occurs every 3 lidar shots, which results in a maximum of 40,095 grid lines per orbit (20,048 grid lines per half orbit). Since the IIR track product only outputs pixels that contain high clouds, there will be considerably less than 20,048 records in each file.

Table 45: IIR/Lidar Track Product Summary

Record Name	Reference	Record Size	Records/File	File Size (Bytes)
Core Metadata Record	Appendix A	870	1	870
Archive Metadata Record	Appendix A	4	1	4
IIR Track Metadata Record	Table 46	377	1	377
IIR/Lidar Track Science Record	Table 47	220	20,048	4,410,560
Total Size Profile Data Product (Bytes)				**4,411,811**
Total Size Profile Data Product (Mbytes)				**4.207**

2.8.2 IIR/Lidar Track Metadata

The IIR/Lidar Track products include three Vdata record types (i.e., metadata) shown in the tables above. Listings for the core metadata and the archive metadata are provided in Appendix A. The metadata parameters specific to the IIR/Lidar Track Product are listed in Table 46.

Table 46: IIR/Lidar Track Metadata Record

Parameter	Data Type	Units	Nominal Range	Elem/ Rec	Bytes
Product_ID	Char	NoUnits	CAL_IIR_L2_Track	80	80
Date_Time_at_Granule_Start[A]	Char	NoUnits	4/2006 – 6/2016	27	27
Date_Time_at_Granule_End[A]	Char	NoUnits	4/2006 – 6/2016	27	27
Date_Time_of_Production[A]	Char	NoUnits	4/2006 – 6/2016	27	27
Initial_IIR_Scan_Center_Latitude	Float_32	deg	-90.0…90.0	1	4
Initial_IIR_Scan_Center_Longitude	Float_32	deg	-180.0…180.0	1	4
Ending_IIR_Scan_Center_Latitude	Float_32	deg	-90.0…90.0	1	4
Ending_IIR_Scan_Center_Longitude	Float_32	deg	-180.0…180.0	1	4
Orbit_Number_at_Granule_Start	UInt_32	N/A	$1\ldots2^{32}-1$	1	4
Orbit_Number_at_Granule_End	UInt_32	N/A	$1\ldots2^{32}-1$	1	4
Orbit_Number_Change_Time[D]	Float_64	NoUnits	60,426.0…160,601.0	1	8
Path_Number_at_Granule_Start	Int_16	N/A	1…233	1	2
Path_Number_at_Granule_End	Int_16	N/A	1…233	1	2
Path_Number_Change_Time[D]	Float_64	NoUnits	60,426.0…160,601.0	1	8
Number_of_IIR_Records_in_File	Int_16	NoUnits	0…20,048	1	2
Number_of_Valid_08_65_Pixels	Int_16	NoUnits	0…20,048	1	2
Number_of_Valid_12_05_Pixels	Int_16	NoUnits	0…20,048	1	2
Number_of_Valid_10_60_Pixels	Int_16	NoUnits	0…20,048	1	2
Number_of_Invalid_08_65_Pixels	Int_16	NoUnits	0…20,048	1	2
Number_of_Invalid_12_05_Pixels	Int_16	NoUnits	0…20,048	1	2
Number_of_Invalid_10_60_Pixels	Int_16	NoUnits	0…20,048	1	2
Number_of_Rejected_08_65_Pixels	Int_16	NoUnits	0…20,048	1	2
Number_of_Rejected_12_05_Pixels	Int_16	NoUnits	0…20,048	1	2
Number_of_Rejected_10_60_Pixels	Int_16	NoUnits	0…20,048	1	2
Number_of_Rejected_08_65_Pixels_Location	Int_16	NoUnits	0…20,048	1	2
Number_of_Rejected_12_05_Pixels_Location	Int_16	NoUnits	0…20,048	1	2
Number_of_Rejected_10_60_Pixels_Location	Int_16	NoUnits	0…20,048	1	2
Number_of_Rejected_08_65_Pixels_Radiance	Int_16	NoUnits	0…20,048	1	2
Number_of_Rejected_12_05_Pixels_Radiance	Int_16	NoUnits	0…20,048	1	2
Number_of_Rejected_10_60_Pixels_Radiance	Int_16	NoUnits	0…20,048	1	2
Mean_08_65_Radiance_All	Float_32	$Wm^{-2}sr^{-1}\mu m^{-1}$	TBD	1	4
Mean_12_05_Radiance_All	Float_32	$Wm^{-2}sr^{-1}\ \mu m^{-1}$	TBD	1	4
Mean_10_60_Radiance_All	Float_32	$Wm^{-2}sr^{-1}\ \mu m^{-1}$	TBD	1	4
Mean_08_65_Radiance_Selected_Cases	Float_32	$Wm^{-2}sr^{-1}\ \mu m^{-1}$	TBD	1	4
Mean_12_05_Radiance_Selected_Cases	Float_32	$Wm^{-2}sr^{-1}\ \mu m^{-1}$	TBD	1	4
Mean_10_60_Radiance_Selected_Cases	Float_32	$Wm^{-2}sr^{-1}\ \mu m^{-1}$	TBD	1	4
Mean_08_65_Brightness_Temp_All	Float_32	K	0.0…400.0	1	4
Mean_12_05_Brightness_Temp_All	Float_32	K	0.0…400.0	1	4
Mean_10_60_Brightness_Temp_All	Float_32	K	0.0…400.0	1	4
Mean_08_65_Brightness_Temp_Selected_Cases	Float_32	K	0.0…400.0	1	4
Mean_12_05_Brightness_Temp_Selected_Cases	Float_32	K	0.0…400.0	1	4
Mean_10_60_Brightness_Temp_Selected_Cases	Float_32	K	0.0…400.0	1	4
Number_of_Valid_LIDAR_Pixels	Int_16	NoUnits	0…20,048	1	2

Parameter	Data Type	Units	Nominal Range	Elem/ Rec	Bytes
Number_of_Invalid_LIDAR_Pixels	Int_16	NoUnits	0…20,048	1	2
Number_of_Rejected_LIDAR_Pixels	Int_16	NoUnits	0…20,048	1	2
Number_of_Identified_Pixels_Upper_Level	Int_16	NoUnits	0…20,048	1	2
Percent_of_Identified_Pixels_Upper_Level	Float_32	%	0.0…100.0	1	4
Number_of_Identified_Pixels_Lower_Level	Int_16	NoUnits	0…20,048	1	2
Percent_of_Identified_Pixels_Lower_Level	Float_32	%	0.0…100.0	1	4
Number_of_Identified_Pixels_Clear_Sky	Int_16	NoUnits	0…20,048	1	2
Percent_of_Identified_Pixels_Clear_Sky	Float_32	%	0.0…100.0	1	4
Mean_Altitude_Upper_Level	Float_32	km	-0.5…30.1	1	4
GEOS_Version	Char	NoUnits	N/A	64	64
Record Size (bytes)					**377**

A) UTC CCSDS ASCII Time Code Format A
D) TAI time converted to UTC time and stored in format: yymmdd.ffffffff

2.8.3 IIR/Lidar Track Scientific Data Sets

Table 47 summarizes the contents of each scientific data set (SDS) contained within the IIR/Lidar Track products. Each parameter is listed using the same SDS name that is used in the respective HDF files. Units are given for each parameter, as is the range of valid data values. Parameters for which a valid range has not yet been established are listed as TBD (to be determined).

Table 47: IIR/Lidar Track Science Record

Parameter	Data Type	Units	Range	Elem/ Rec	Bytes
Latitude	Float_32	deg	-90.0…90.0	1	4
Longitude	Float_32	deg	-180.0…180.0	1	4
LIDAR_Shot_Time	Float_64	sec	N/A	1	8
IIR_Image_Time_12_05	Float_64	sec	N/A	1	8
Brightness_Temperature_08_65	Float_32	K	0.0…400.0	1	4
Brightness_Temperature_12_05	Float_32	K	0.0…400.0	1	4
Brightness_Temperature_10_60	Float_32	K	0.0…400.0	1	4
Effective_Emissivity_08_65	Float_32	NoUnits	-0.1…1.1	1	4
Effective_Emissivity_12_05	Float_32	NoUnits	-0.1…1.1	1	4
Effective_Emissivity_10_60	Float_32	NoUnits	-0.1…1.1	1	4
Effective_Emissivity_Uncertainty_08_65	Float_32	NoUnits	TBD	1	4
Effective_Emissivity_Uncertainty_12_05	Float_32	NoUnits	TBD	1	4
Effective_Emissivity_Uncertainty_10_60	Float_32	NoUnits	TBD	1	4
Emissivity_08_65	Float_32	NoUnits	0.0…1.0	1	4
Emissivity_12_05	Float_32	NoUnits	0.0…1.0	1	4
Emissivity_10_60	Float_32	NoUnits	0.0…1.0	1	4
Emissivity_Uncertainty_08_65	Float_32	NoUnits	TBD	1	4
Emissivity_Uncertainty_12_05	Float_32	NoUnits	TBD	1	4
Emissivity_Uncertainty_10_60	Float_32	NoUnits	TBD	1	4
Particle_Shape_Index	Int_8	NoUnits	TBD	1	1
Particle_Shape_Index_Confidence	Int_8	NoUnits	0…100	1	1
g	Int_8	NoUnits	TBD	1	1
g_confidence	Int_8	NoUnits	0…100	1	1

Parameter	Data Type	Units	Range	Elem/ Rec	Bytes
Effective_Particle_Size	Float_32	μm	0.0…300.0	1	4
Effective_Particle_Size_Uncertainty	Float_32	μm	TBD	1	4
Clear_Sky_Radiance_08_65	Float_32	$Wm^{-2}sr^{-1}\mu m^{-1}$	TBD	1	4
Clear_Sky_Radiance_12_05	Float_32	$Wm^{-2}sr^{-1}\ \mu m^{-1}$	TBD	1	4
Clear_Sky_Radiance_10_60	Float_32	$Wm^{-2}sr^{-1}\ \mu m^{-1}$	TBD	1	4
Optical_Depth_12_05	Float_32	NoUnits	TBD	1	4
Optical_Depth_12_05_Uncertainty	Float_32	NoUnits	TBD	1	4
Ice_Water_Path	Float_32	$kg.m^{-2}$	TBD	1	4
Ice_Water_Path_confidence	Float_32	$kg.m^{-2}$	TBD	1	4
Optical_Depth_0532_Upper_Level	Float_32	NoUnits	0.0…5.0	1	4
Depolarization_Upper_Level	Float_32	NoUnits	0.0…1.0	1	4
Integrated_Backscatter_Upper_Level	Float_32	sr^{-1}	0.0…1.0	1	4
Layer_Top_Height_Upper_Level	Float_32	km	-0.5…30.1	1	4
Centroid_IAB_0532_Upper_Level	Float_32	km	-0.5…30.1	1	4
Layer_Bottom_Height_Upper_Level	Float_32	km	-0.5…30.1	1	4
Layer_Top_Temperature_Upper_Level	Float_32	K	160.0…340.0	1	4
Temperature_Centroid_IAB_0532_Upper_Level	Float_32	K	160.0…340.0	1	4
Optical_Depth_0532_Lower_Level	Float_32	NoUnits	0.0…5.0	1	4
Depolarization_Lower_Level	Float_32	NoUnits	0.0…1.0	1	4
Integrated_Backscatter_Lower_Level	Float_32	sr^{-1}	0.0…1.0	1	4
Layer_Top_Height_Lower_Level	Float_32	km	-0.5…30.1	1	4
Centroid_IAB_0532_Lower_Level	Float_32	km	-0.5…30.1	1	4
Layer_Bottom_Height_Lower_Level	Float_32	km	-0.5…30.1	1	4
Layer_Top_Temperature_Lower_Level	Float_32	K	160.0…340.0	1	4
Temperature_Centroid_IAB_0532_Lower_Level	Float_32	K	160.0…340.0	1	4
Surface_Emissivity_08_65	Float_32	NoUnits	0.0…1.0	1	4
Surface_Emissivity_12_05	Float_32	NoUnits	0.0…1.0	1	4
Surface_Emissivity_10_60	Float_32	NoUnits	0.0…1.0	1	4
IIR_Data_Quality_Flag	Int_8	NoUnits	0…1	1	1
LIDAR_Data_Quality_Flag	Int_8	NoUnits	0…3	1	1
Type_of_Scene	Int_8	NoUnits	TBD	1	1
Surrounding_Obs_Quality_Flag	Int_8	NoUnits	TBD	1	1
High_Cloud_vs_Background_flag	Float_32	NoUnits	TBD	1	4
Computed_vs_Observed_Background	Float_32	NoUnits	TBD	1	4
Regional_Background_Std_Dev	Float_32	NoUnits	TBD	1	4
Reference_Homogeneity_Flag	Float_32	NoUnits	TBD	1	4
Record Size (bytes)					**220**

2.9 IIR Level 2 Swath Product DP 2.2B

The IIR Level 2 Swath data product contains IIR emissivity and cloud particle data assigned to IIR pixels on a 1 km grid centered on the lidar track. The Level 2 data product is written in HDF. The records are listed in Table 48.

The major categories of the data product are:

- Cloud Emissivity
- Cloud Properties

Level: 2

Type: Archival

Frequency: 2/Orbit

Spatial Resolution Record:

1 km pixels x 70 km swath

Time Interval Covered:

File: Half Orbit (Day or Night)

Data File Name:

Table 48: CAL_IIR_L2_Swath-ProductionStrategy-Version.Instance.hdf

2.9.1 IIR Level 2 Swath Product

The maximum number of IIR sequences processed in one orbit is 729 (1 sequence every 8.15 seconds). Image data are registered to a 1 km grid centered on the lidar track. Each grid line occurs every 3rd lidar shot, or 40,095 grid lines per orbit (20,048 per half orbit).

Table 48: IIR Swath Product Summary

Record Name	Reference	Record Size	Records/File	File Size (bytes)
Core Metadata Record	Appendix A	870	1	870
Archive Metadata Record	Appendix A	4	1	4
Swath Metadata	Table 49	379	1	379
Swath Science Record	Table 50	5,873	20,048	117,741,904
Total Size Profile Data Product (bytes)				**117,743,157**
Total Size Swath Data Product (Mbytes)				**112.289**

2.9.2 IIR Swath Metadata

The IIR Swath products include three Vdata record types (i.e., metadata) shown in the tables above. Listings for the core metadata and the archive metadata are provided in Appendix A. The metadata parameters specific to the IIR Swath Product are listed in Table 49.

Table 49: IIR Swath Product Metadata Record

Parameter	Data Type	Units	Nominal Range	Elem/ Rec	Bytes
Product_ID	Char	NoUnits	CAL_IIR_L2_Swath	80	80
Date_Time_at_Granule_Start	Char	NoUnits	4/2006 – 6/2016	27	27
Date_Time_at_Granule_End	Char	NoUnits	4/2006 – 6/2016	27	27
Date_Time_of_Production	Char	NoUnits	4/2006 – 6/2016	27	27
Initial_IIR_Scan_Center_Latitude	Float_32	deg	-90.0…90.0	1	4
Initial_IIR_Scan_Center_Longitude	Float_32	deg	-180.0…180.0	1	4
Ending_IIR_Scan_Center_Latitude	Float_32	deg	-90.0…90.0	1	4
Ending_IIR_Scan_Center_Longitude	Float_32	deg	-180.0…180.0	1	4
Orbit_Number_at_Granule_Start	UInt_32	N/A	$1…2^{32}-1$	1	4
Orbit_Number_at_Granule_End	UInt_32	N/A	$1…2^{32}-1$	1	4
Orbit_Number_Change_Time[A]	Float_64	NoUnits	60,426.0…160,601.0	1	8
Path_Number_at_Granule_Start	Int_16	N/A	1…233	1	2
Path_Number_at_Granule_End	Int_16	N/A	1…233	1	2
Path_Number_Change_Time[A]	Float_64	NoUnits	60,426.0…160,601.0	1	8
Number_of_IIR_Records_in_File	Int_16	NoUnits	0…20,048	1	2
Number_of_Valid_08_65_Pixels	Int_32	NoUnits	0…1,383,312	1	4
Number_of_Valid_12_05_Pixels	Int_32	NoUnits	0…1,383,312	1	4
Number_of_Valid_10_60_Pixels	Int_32	NoUnits	0…1,383,312	1	4
Number_of_Invalid_08_65_Pixels	Int_32	NoUnits	0…1,383,312	1	4
Number_of_Invalid_12_05_Pixels	Int_32	NoUnits	0…1,383,312	1	4
Number_of_Invalid_10_60_Pixels	Int_32	NoUnits	0…1,383,312	1	4
Number_of_Rejected_08_65_Pixels	Int_32	NoUnits	0…1,383,312	1	4
Number_of_Rejected_12_05_Pixels	Int_32	NoUnits	0…1,383,312	1	4
Number_of_Rejected_10_60_Pixels	Int_32	NoUnits	0…1,383,312	1	4
Number_of_Rejected_08_65_Pixels_Loc	Int_32	NoUnits	0…1,383,312	1	4
Number_of_Rejected_12_05_Pixels_Loc	Int_32	NoUnits	0…1,383,312	1	4
Number_of_Rejected_10_60_Pixels_Loc	Int_32	NoUnits	0…1,383,312	1	4
Number_of_Rejected_08_65_Pixels_Rad	Int_32	NoUnits	0…1,383,312	1	4
Number_of_Rejected_12_05_Pixels_Rad	Int_32	NoUnits	0…1,383,312	1	4
Number_of_Rejected_10_60_Pixels_Rad	Int_32	NoUnits	0…1,383,312	1	4
Mean_08_65_Radiance_All	Float_32	$Wm^{-2}sr^{-1}\mu m^{-1}$	TBD	1	4
Mean_12_05_Radiance_All	Float_32	$Wm^{-2}sr^{-1}\ \mu m^{-1}$	TBD	1	4
Mean_10_60_Radiance_All	Float_32	$Wm^{-2}sr^{-1}\ \mu m^{-1}$	TBD	1	4
Mean_08_65_Radiance_Selected_Cases	Float_32	$Wm^{-2}sr^{-1}\ \mu m^{-1}$	TBD	1	4
Mean_12_05_Radiance_Selected_Cases	Float_32	$Wm^{-2}sr^{-1}\ \mu m^{-1}$	TBD	1	4
Mean_10_60_Radiance_Selected_Cases	Float_32	$Wm^{-2}sr^{-1}\ \mu m^{-1}$	TBD	1	4
Mean_08_65_Brightness_Temp_All	Float_32	K	0.0…400.0	1	4
Mean_12_05_Brightness_Temp_All	Float_32	K	0.0…400.0	1	4
Mean_10_60_Brightness_Temp_All	Float_32	K	0.0…400.0	1	4
Mean_08_65_Brightness_Temp_Selected_Cases	Float_32	K	0.0…400.0	1	4
Mean_12_05_Brightness_Temp_Selected_Cases	Float_32	K	0.0…400.0	1	4

Parameter	Data Type	Units	Nominal Range	Elem/ Rec	Bytes
Mean_10_60_Brightness_Temp_Selected_Cases	Float_32	K	0.0…400.0	1	4
GEOS_Version	Char	NoUnits	N/A	64	64
Record Size (bytes)					**379**

A) UTC CCSDS ASCII Time Code Format A
D) TAI time converted to UTC time and stored in format: yymmdd.ffffffff

2.9.3 IIR Swath Scientific Data Sets

Table 50 summarizes the contents of each scientific data set (SDS) contained within the IIR Swath product. Each parameter is listed using the same SDS name that is used in the respective HDF files. Units are given for each parameter, as is the range of valid data values. Parameters for which a valid range has not yet been established are listed as TBD (to be determined).

Table 50: IIR Swath Product Science Record

Parameter	Data Type	Units	Nominal Range	Elem/ Rec	Bytes
Latitude	Float_32	deg	-90.0…90.0	69	276
Longitude	Float_32	deg	-180.0…180.0	69	276
LIDAR_Shot_Time	Float_64	sec	N/A	69	552
IIR_Image_Time_12_05	Float_64	sec	N/A	1	8
LIDAR_DayNight_Flag	Int_8	NoUnits	0…1	69	69
Brightness_Temperature_08_65	Int_16	K	0…400.0	69	138
Brightness_Temperature_12_05	Int_16	K	0…400.0	69	138
Brightness_Temperature_10_60	Int_16	K	0…400.0	69	138
Calibrated_WFC_reflectance	Int_16	NoUnits	0.0…2.2	69	138
Surface_Emissivity_08_65	Int_16	NoUnits	0.0…1.0	69	138
Surface_Emissivity_12_05	Int_16	NoUnits	0.0…1.0	69	138
Surface_Emissivity_10_60	Int_16	NoUnits	0.0…1.0	69	138
Effective_Emissivity_08_65	Int_16	NoUnits	-0.1…1.1	69	138
Effective_Emissivity_12_05	Int_16	NoUnits	-0.1…1.1	69	138
Effective_Emissivity_10_60	Int_16	NoUnits	-0.1…1.1	69	138
Effective_Emissivity_Uncertainty_08_65	Int_16	NoUnits	TBD	69	138
Effective_Emissivity_Uncertainty_12_05	Int_16	NoUnits	TBD	69	138
Effective_Emissivity_Uncertainty_10_60	Int_16	NoUnits	TBD	69	138
Emissivity_08_65	Int_16	NoUnits	0.0…1.0	69	138
Emissivity_12_05	Int_16	NoUnits	0.0…1.0	69	138
Emissivity_10_60	Int_16	NoUnits	0.0…1.0	69	138
Emissivity_Uncertainty_08_65	Int_16	NoUnits	TBD	69	138
Emissivity_Uncertainty_12_05	Int_16	NoUnits	TBD	69	138
Emissivity_Uncertainty_10_60	Int_16	NoUnits	TBD	69	138
Homogeneity_index_BT_08_65	Int_8	NoUnits	0…100	69	69
Homogeneity_index_BT_12_05	Int_8	NoUnits	0…100	69	69
Homogeneity_index_BT_10_60	Int_8	NoUnits	0…100	69	69
Homogeneity_index_surface_e_08_65	Int_8	NoUnits	0…100	69	69
Homogeneity_index_surface_e_12_05	Int_8	NoUnits	0…100	69	69

Parameter	Data Type	Units	Nominal Range	Elem/ Rec	Bytes
Homogeneity_index_surface_e_10_60	Int_8	NoUnits	0…100	69	69
Homogeneity_index_reflectance	Int_8	NoUnits	0…100	69	69
Homogeneity_index_surface_temperature	Int_8	NoUnits	0…100	69	69
Homogeneity_index_humidity_profile	Int_8	NoUnits	0…100	69	69
Particle_Shape_Index	Int_8	NoUnits	TBD	69	69
Particle_Shape_Confidence	Int_8	NoUnits	TBD	69	69
g	Int_8	NoUnits	TBD	69	69
g_Confidence	Int_8	NoUnits	0…100	69	69
Effective_Particle_Size	Int_16	μm	0.0…300.0	69	138
Effective_Particle_Size_Uncertainty	Int_16	μm	TBD	69	138
Optical_Depth_12_05	Int_16	NoUnits	TBD	69	138
Optical_Depth_12_05_Uncertainty	Int_16	NoUnits	TBD	69	138
Ice_Water_Path	Int_16	$kg.m^{-2}$	TBD	69	138
Ice_Water_Path_Confidence	Int_16	$kg.m^{-2}$	TBD	69	138
Scene_Flag	Int_32	NoUnits	TBD	69	276
IIR_Data_Quality	Int_8	NoUnits	0…1	69	69
Record Size (bytes)					**5,873**

3.0 Level 0 Input Data Products

This section describes the CALIPSO Level 0 input data products that are stored at the Langley ASDC. Each subsection contains a brief overview of the purpose and content of the data product. See references for Level 0 format details.

3.1 Lidar Level 0 Data

The Lidar Level 0 data set contains profiles for the 532 nm parallel, 532 nm perpendicular, and 1064 nm channels, along with selected instrument health and status information. To reduce the telemetry data rate, the lidar instrument performs significant processing prior to data downlink. On-orbit, the instrument performs profile vertical and horizontal averaging, as well as altitude registration to a fixed grid above local mean sea level. Current profile averaging parameters and spatial resolutions are based on a laser pulse repetition frequency of 20.16 Hz. Averaging parameters are not expected to change during normal on-orbit operations. The lidar frame in Table 51 consists of data averaged from 15 lidar shots with the instantaneous field of view for each shot occurring every 333 m along track.

Table 51: On-orbit Lidar Profile Horizontal and Vertical Averaging for 532 nm

Level	Altitude (km)	Shots Aver.	Horiz Res (km)	Vert Res (m)	Samples per Profile	Profiles per Frame	Samples per Frame
Upper Stratosphere	30.1 - 40.0	15	5.0	300	33	1	33
Lower Stratosphere	20.2 - 30.1	5	1.667	180	55	3	165
Upper Troposphere	8.2 - 20.2	3	1	60	200	5	1,000
Lower Troposphere	-0.5 - 8.2	1	0.333	30	290	15	4,350
Subsurface	-2.0 - -0.5	1	0.333	300	5	15	75
Total					**583**		**5,623**

Table 52: On-orbit Lidar Profile Horizontal and Vertical Averaging for 1064 nm

Level	Altitude (km)	Shots Aver.	Horiz Res (km)	Vert Res (m)	Samples per Profile	Profiles per Frame	Samples per Frame
Upper Stratosphere	30.1 - 40.0	N/A	N/A	N/A	N/A	N/A	N/A
Lower Stratosphere	20.2 - 30.1	5	1.667	180	55	3	165
Upper Troposphere	8.2 - 20.2	3	1	60	200	5	1,000
Lower Troposphere	-0.5 - 8.2	1	0.333	60	145	15	2,175
Subsurface	-2.0 - -0.5	1	0.333	300	5	15	75
Total					**405**		**3,415**

3.2 Imaging Infrared Radiometer Level 0 Data

The Imaging Infrared Radiometer (IIR) Level 0 data set provides radiance counts at 8.65 μm, 10.6 μm and 12.05 μm. The IIR samples 64 km x 64 km images for each channel, every 8.15 seconds. Each IFOV is approximately 1 km x 1 km at the Earth's surface. On-orbit calibration is performed using the black body and deep space references. Each sequence contains three Earth images (one per channel) followed by either three black body or cold space images.

3.3 Wide Field Camera Level 0 Data

The Wide Field Camera (WFC) Level 0 data set consists of high spatial resolution imagery data used to ascertain cloud homogeneity over the footprint of the Lidar/IIR, aid cloud clearing, and provide overall meteorological context. The WFC is a digital camera that collects imagery in the 620 nm to 670 nm wavelength range during daylight segments of the orbit. The WFC views a 61 km wide swath centered on the lidar boresight. The IFOV of each pixel is approximately 125 m at the Earth's surface. The WFC acquires data at a rate of 0.28 frames per second. On-board processing bins pixels outside the central 5 km cross track swath to give an IFOV of 1 km, thus reducing the downlinked data rate.

4.0 Ancillary Input Data Products

This section describes the ancillary data products, which are stored at the Langley ASDC. Each subsection contains a brief overview of the data product content. See references for ancillary data format details.

4.1 Ephemeris Data

CNES is the primary source of post-processed ephemeris data used in science data processing. The post-processed ephemeris data are received from the CALIPSO Mission Operations Control Center (MOCC) via the LATIS Ingest System. See PC-GND-905 ICD between the CALIPSO MOCC and the ASDC for data format and content.

To use the EOSDIS Core System (ECS) Toolkit geolocation routines, spacecraft ephemeris data must be in a Toolkit compatible format. Appendix L of the Toolkit Users Guide (See Reference 11) specifies the EOSDIS spacecraft ephemeris data contents and structure. Appendix L specifies time standards, reference coordinate systems for both ephemeris and orbital elements, and orbit numbering. *Terra Spacecraft Ephemeris and Attitude Data Preprocessing* (See Reference 12) describes the task used to reformat the Terra spacecraft ephemeris data into a compatible Toolkit format. The DMS data subsystem DPREP 0.2 converts CNES provided ephemeris into the Toolkit format.

4.2 Attitude Data

The Payload Data Delivery System (PDDS), or Level 0 processing facility, is the primary source of attitude data for science data processing. See PDDS/ASDC ICD for data format and content.

To use the ECS Toolkit geolocation routines, spacecraft attitude data must be in a compatible Toolkit format. Appendix L of the Toolkit Users Guide (See Reference 11) specifies the EOSDIS spacecraft attitude data contents and structure. Appendix L specifies time standards, reference coordinate systems for both ephemeris and orbital elements, and orbit numbering. *Terra Spacecraft Ephemeris and Attitude Data Preprocessing* (See Reference 12) describes the task used to reformat the Terra spacecraft attitude data into the Toolkit format. The DMS data subsystem DPREP 0.1 converts PDDS provided attitude data into a compatible Toolkit format.

4.3 Global Modeling and Assimilation Office (GMAO)

The GMAO at the Goddard Space Flight Center is the primary source of meteorological data used for the standard CALIPSO data processing. The gridded files are from version 5 of the Goddard Earth Observing System Data Assimilation System (GEOS-5 DAS). Some files contain 2-D variables on a lon/lat grid and some files contain 3-D variables on the same lon/lat grid but with an additional vertical dimension. In order to keep individual file sizes manageable, all files contain only one valid data time. CALIPSO data processing uses GMAO files of type:

1) inst2d_met_x
2) inst3d_met_p

All instantaneous products contain fields that are snapshots of a specific time, with a single time per file. Products of type “inst3d_met_p” have a time frequency of 6 hours, with data valid at the four standard *synoptic times* (00 GMT, 06 GMT, 12 GMT, and 18 GMT). Instantaneous single-level products, such as “inst2d_met_x,” have a time frequency of 3 hours, valid at the times listed above, plus the interim times of 03 GMT, 09 GMT, 15 GMT, and 21 GMT.

Reference 18 describes these files in detail, including file format, sizes, and content.

4.4 SDP Toolkit Digital Elevation Model (DEM)

The Toolkit's DEM tools provide access to a hierarchy of DEM data sets irrespective of tile boundaries or resolutions. Three resolutions are available, 3 arc second (~100 m), 30 arc second (~1 km), and 90 arc second (~3 km). The 30 arc second resolution consists of six tiles. These tiles collectively cover the whole world. Each tile consists of two files. The first file includes elevation, land/sea mask, slope, aspect, and geoid data. The second file includes data for the standard deviations. Each file covers 120 degrees of longitude and 90 degrees of latitude.

The upper left corner of the entire data set is at 180 degrees West and 90 degrees North. The pixels are center located. Therefore, the location of global pixel (0, 0) is actually (89.99583333333334, -179.99583333333334) signed decimal degrees. The lower right corner is (-89.99583333333334, 179.99583333333334) decimal degrees, or (21599, 43199) in global pixels. Querying of points outside this region will result in an error.

The primary file for each 30 arc second tile is approximately 1090 MB. The secondary standard deviation file for each tile is approximately 622 MB.

Available metadata are PGSd_DEM_GEOID, PGSd_DEM_SOURCE, PGSd_DEM_METHOD, PGSd_DEM_VERTICAL_ACCURACY, and PGSd_DEM_HORIZONTAL_ACCURACY.

Please see: http://newsroom.gsfc.nasa.gov/sdptoolkit/3km_announcement_5261.txt for more information.

4.5 SDP Toolkit Land and Water Coverage

The 30 arc second resolution land/water mask is included in the Toolkit DEM data set described in section 4.4. The 8 surface types available in the land/water mask are:

Land/Water Mask Legend

Type:	Land/Water Mask
Shallow ocean	0
Land (Nothing else but land)	1
Ocean coastlines and lake	2
Shallow inland water	3
Ephemeral water	4
Deep inland water	5
Moderated or continental ocean	6
Deep ocean	7

4.6 International Geosphere Biosphere Programme (IGBP) Ecosystem

The U.S. Geological Survey's (USGS) Earth Resources Observation System (EROS) Data Center, the University of Nebraska-Lincoln (UNL), and the Joint Research Centre of the European Commission have generated a 1 km resolution global land cover characteristics data base for use in a wide range of environmental research and modeling applications (Loveland et al., 2000). The land cover characterization effort is part of the NASA Cloud – Aerosol Lidar Infrared Pathfinder Satellite Observations Program and the International Geosphere-Biosphere Programme-Data and Information System activity. From this effort, a global 1 km resolution Surface Type map was produced by the IGBP.

The data set is derived from 1 km Advanced Very High Resolution Radiometer (AVHRR) data spanning a 12 month period (April 1992 - March 1993). See the paper, "International Geosphere Biosphere Programme Land Cover Classification" (Belward, 1996) for more information.

The map in use is provided by the CERES Surface and Atmospheric Radiation Budget (SARB) working group. The map is determined using the 1 km IGBP scene types supplied by the USGS, and is provided as a 10′ equal angle map (1080 x 2160 elements). An 18th scene type (TUNDRA) is added to distinguish the rocky/barren scene of northern climes vs. that of other deserts.

Additional details may be found at http://www-surf.larc.nasa.gov/surf/pages/sce_type.html under "Data Products" and "Global Land Cover Characterization".

IGBP Land Cover Legend

Value	Description
1	Evergreen Needleleaf Forest
2	Evergreen Broadleaf Forest
3	Deciduous Needleleaf Forest
4	Deciduous Broadleaf Forest
5	Mixed Forest
6	Closed Shrublands
7	Open Shrublands
8	Woody Savannas
9	Savannas
10	Grasslands
11	Permanent Wetlands
12	Croplands
13	Urban and Built-Up
14	Cropland/Natural Vegetation Mosaic
15	Snow and Ice
16	Barren / Desert
17	Water Bodies
18	Tundra

4.7 National Snow and Ice Data Center (NSIDC) Map

The Near Real-Time SSM/I EASE-Grid Daily Global Ice Concentration and Snow Extent product (Near Real-Time Ice and Snow Extent, NISE) generates a daily near real-time map of sea ice concentrations and snow extent in both the Northern and Southern Hemispheres. The NISE product is created using passive microwave data from the Defense Meteorological Satellite Program (DMSP) F13 Special Sensor Microwave/Imager (SSM/I). Snow extent and sea ice concentration maps are provided daily on a 25 km azimuthal, equal-area projection. The NISE product is available within approximately one to two days of the satellite overpass. The CERES data processing team re-maps the data onto a 10 minute equal area grid. The current CALIPSO build uses the 10 minute data from CERES.

See: http://www.nsidc.org and look under Sea Ice and Ice Extent for "Near Real-Time SSM/I EASE-Grid Daily Global Ice Concentration And Snow Extent" for further information.

The NSISC_Surface_Type variable contains the following data which is merged from the CERES EICE and ESNOW data sets:

NSIDC SEA Ice and Snow Extent Legend

Data Value	Parameter
0 - 100	Sea ice concentration %

101	Permanent ice (Greenland, Antarctica)
102	Not used
103	Snow
104 - 254	Not used
255	Mixed pixels at coastlines (unable to reliably apply microwave algorithms)

5.0 Engineering Data Products

This section describes the CALIPSO engineering data products permanently archived at the Langley ASDC. Each subsection contains a brief overview of the purpose and content of the data product followed by one or more tables which list every parameter contained in the product.

5.1 Lidar Calibration

The Lidar Calibration product contains results from lidar calibration processing. Each record contains data averaged over different horizontal and vertical regions. A summary of the product records is listed in Table 53.

The major categories of lidar calibration data are:

- Depolarization Gain Ratios
- Nighttime Calibration Data
- Daytime Calibration Data
- Instrument Settings
- Housekeeping Data

Level: N/A

Type: Engineering

Frequency: Daily

Spatial Resolution Record:

532 Calibration - 55 km

1064 Calibration - variable depending on cirrus cloud presence and thickness

Time Interval Covered:

File: 24 hours

Data File Name:

Table 53: CAL_L1_CAL_HIS-ProductionStrategy-Version.Instance.hdf

5.1.1 Lidar Calibration Product

The number of Segment Summary records is based on one per orbit.

For estimating data product size:

- The number of 532 nm calibration records is based on 4010 packets per half orbit ((4010/11) x 15)).
- The number of 1064 nm calibration records is based on 4010 packets per half orbit ((4010 x 15) + (2005 x 15) = nighttime portion + daytime portion).
- The number of depolarization gain ratio records in 24 hours is assumed to be 1.
- The number of Instrument Setting records in 24 hours is assumed to be 1.

Table 53: Lidar Calibration Product Summary

Record Name	Reference	Record Size	Recs/File	File Size (bytes)
Core Metadata Record	Appendix A	870	1	870
Archive Metadata Record	Appendix A	4	1	4
Lidar Calibration Metadata Record	Table 54	4,241	1	4,241
Lidar Nighttime Segment Summary Record	Table 55	148	15	2,220
Lidar Nighttime 532 Calibration Record	Table 56	158	5,468	863,944
Lidar 1064 Calibration Record (daytime and nighttime)	Table 57	66	90,225	5,954,850
Lidar Daytime Segment Summary Record	Table 58	84	15	1,260
Lidar Depolarization Gain Ratio Record	Table 59	144	1	144
Total Size (bytes)				**6,827,533**
Total Size (Mbytes)				**6.511**

5.1.2 Lidar Calibration Metadata

The Lidar Calibration product includes three Vdata record types (i.e., metadata) shown in the tables above. Listings for the core metadata and the archive metadata are provided in Appendix A. The metadata parameters specific to the Lidar Calibration Product are listed in Table 54.

Table 54: Lidar Calibration Metadata Record

Parameter	Data Type	Units	Nominal Range	Elem/ Rec	Bytes
Product_ID	Char	NoUnits	L1_LIDAR_Asm	80	80
Date_Time_at_Granule_Start[A]	Char	NoUnits	4/2006 – 6/2016	27	27
Date_Time_at_Granule_End[A]	Char	NoUnits	4/2006 – 6/2016	27	27
Date_Time_of_Production[A]	Char	NoUnits	4/2006 – 6/2016	27	27
Initial_Subsatellite_Latitude	Float_32	deg	-90.0…90.0	1	4
Initial_Subsatellite_Longitude	Float_32	deg	-180.0…180.0	1	4
Final_Subsatellite_Latitude	Float_32	deg	-90.0…90.0	1	4
Final_Subsatellite_Longitude	Float_32	deg	-180.0…180.0	1	4
Orbit_Number_at_Granule_Start	UInt_32	N/A	$1\ldots2^{32}-1$	1	4
Orbit_Number_at_Granule_End	UInt_32	N/A	$1\ldots2^{32}-1$	1	4
Orbit_Number_Change_Time[D]	Float_64	NoUnits	60,426.0…160,601.0	1	8
Path_Number_at_Granule_Start	Int_16	N/A	1…233	1	2
Path_Number_at_Granule_End	Int_16	N/A	1…233	1	2
Path_Number_Change_Time[D]	Float_64	NoUnits	60,426.0…160,601.0	1	8
Lidar_L0_Filenames_Processed	Char	NoUnits	48 file names max.	3,900	3,900
GEOS_Version	Char	NoUnits	N/A	64	64
Num_Profiles_In_532_Cal_Constant	Int_16	shots	165…TBD	1	2
Num_532_Cal_Constants_In_Running_Mean	Int_16	shots	13…TBD	1	2
Lower_Altitude_532_Calibration_Constant_Baseline	Float_32	km	-1.845…39.855	1	4
Upper_Altitude_532_Calibration_Constant_Baseline	Float_32	km	-1.845…39.855	1	4
Lower_Altitude_532_Calibration_Constant_Diag1	Float_32	km	-1.845…39.855	1	4
Upper_Altitude_532_Calibration_Constant_Diag1	Float_32	km	-1.845…39.855	1	4
Lower_Altitude_532_Calibration_Constant_Diag2	Float_32	km	-1.845…39.855	1	4
Upper_Altitude_532_Calibration_Constant_Diag2	Float_32	km	-1.845…39.855	1	4
Lower_Altitude_532_Calibration_Constant_Diag3	Float_32	km	-1.845…39.855	1	4
Upper_Altitude_532_Calibration_Constant_Diag3	Float_32	km	-1.845…39.855	1	4
Lower_Altitude_532_Calibration_Constant_Diag4	Float_32	km	-1.845…39.855	1	4
Upper_Altitude_532_Calibration_Constant_Diag4	Float_32	km	-1.845…39.855	1	4
Number_of_1064_Profiles_for_Nighttime_Horiz_Avg	Int_16	shots	15…TBD	1	2
Number_of_1064_Profiles_for_Daytime_Horiz_Avg	Int_16	shots	30…TBD	1	2
Lower_Altitude_for_1064_Cloud_Calibration	Float_32	km	-1.845…39.855	1	4
Upper_Altitude_for_1064_Cloud_Calibration	Float_32	km	-1.845…39.855	1	4
Cloud_Scattering_Ratio_Threshold_532	Float_32	NoUnits	10.0…1000.0	1	4
Northern_Most_Latitude_for_1064_Calibration	Float_32	deg	-90.0…90.0	1	4
Southern_Most_Latitude_for_1064_Calibration	Float_32	deg	-90.0…90.0	1	4
Cloud_Backscatter_Color_Ratio	Float_32	NoUnits	0.5…1.5	1	4
Record Size (bytes)					**4,241**

A) UTC CCSDS ASCII Time Code Format A
D) TAI time converted to UTC time and stored in format: yymmdd.ffffffff

5.1.3 Lidar Calibration Scientific Data Sets

Table 55 through Table 61 summarizes the contents of each scientific data set (SDS) contained within the Lidar Calibration product. Each parameter is listed using the same SDS name that is used in the respective HDF files. Units are given for each parameter, as is the range of valid data values. Parameters for which a valid range has not yet been established are listed as TBD (To Be Determined).

Table 55: Lidar Nighttime Segment Summary Record (One per orbit)

Parameter	Data Type	Units	Nominal Range	Elem/ Rec	Bytes
Starting_Time_Night[C]	Float_64	sec	N/A	1	8
Starting_Time_UTC_Night[D]	Float_64	NoUnits	N/A	1	8
Starting_Latitude_Night	Float_32	deg	-90.0…90.0	1	4
Starting_Longitude_Night	Float_32	deg	-180.0…180.0	1	4
Ending_Time_Night[C]	Float_64	sec	N/A	1	8
Ending_Time_UTC_Night[4]	Float_64	NoUnits	N/A	1	8
Ending_Latitude_Night	Float_32	deg	-90.0…90.0	1	4
Ending_Longitude_Night	Float_32	deg	-180.0…180.0	1	4
Mean_C532_Parallel_Baseline	Float_32	km^3·sr·count	TBD	1	4
Std_Dev_C532_Parallel_Baseline	Float_32	km^3·sr·count	TBD	1	4
Uncertainty_C532_Parallel_Baseline	Float_32	km^3·sr·count	TBD	1	4
Mean_C532_Parallel_Diag1	Float_32	km^3·sr·count	TBD	1	4
Std_Dev_C532_Parallel_Diag1	Float_32	km^3·sr·count	TBD	1	4
Uncertainty_C532_Parallel_Diag1	Float_32	km^3·sr·count	TBD	1	4
Mean_C532_Parallel_Diag2	Float_32	km^3·sr·count	TBD	1	4
Std_Dev_C532_Parallel_Diag2	Float_32	km^3·sr·count	TBD	1	4
Uncertainty_C532_Parallel_Diag2	Float_32	km^3·sr·count	TBD	1	4
Mean_C532_Parallel_Diag3	Float_32	km^3·sr·count	TBD	1	4
Std_Dev_C532_Parallel_Diag3	Float_32	km^3·sr·count	TBD	1	4
Uncertainty_532_Parallel_Diag3	Float_32	km^3·sr·count	TBD	1	4
Mean_C532_Parallel_Diag4	Float_32	km^3·sr·count	TBD	1	4
Std_Dev_C532_Parallel_Diag4	Float_32	km^3·sr·count	TBD	1	4
Uncertainty_C532_Parallel_Diag4	Float_32	km^3·sr·count	TBD	1	4
Mean_C1064_Night_Factor	Float_32	NoUnits	TBD	1	4
Mean_C1064_Night_with_no_OLR	Float_32	km^3·sr·count	TBD	1	4
Std_Dev_C1064_Night_with_no_OLR	Float_32	km^3·sr·count	TBD	1	4
Uncertainty_of_C1064_Night_with_no_OLR	Float_32	km^3·sr·count	TBD	1	4
Number_of_Cloud_Profiles_Night_with_no_OLR	Int_16	NoUnits	TBD	1	2
Mean_C1064_Night_with_OLR	Float_32	km^3·sr·count	TBD	1	4
Std_Dev_C1064_Night_with_OLR	Float_32	km^3·sr·count	TBD	1	4
Uncertainty_of_C1064_Night_with_OLR	Float_32	km^3·sr·count	TBD	1	4
Number_of_Cloud_Profiles_Night_with_OLR	Int_16	NoUnits	TBD	1	2
Cal_1064_Relative_Uncertainty_Threshold	Float_32	NoUnits	0.1…1.0	1	4
Cal_1064_QA_Flag	Int_16	NoUnits	TBD	1	2
Meteorological_Data_Source	Int_16	NoUnits	TBD	1	2
Total Bytes per Record					**148**

C) International Atomic Time (TAI) seconds from Jan. 1, 1993
D) TAI time converted to UTC time and stored in format: yymmdd.ffffffff
OLR: Indicates Outlier Rejection

C: Indicates Calibration Constant

Table 56: Lidar Nighttime 532 Calibration Record

Parameter	Data Type	Units	Nominal Range	Elem/ Rec	Bytes
Midpoint_Profile_Time_532[C]	Float_64	sec	N/A	1	8
Midpoint_Profile_UTC_Time_532[D]	Float_64	NoUnits	N/A	1	8
Midpoint_Latitude_532	Float_32	deg	-90.0…90.0	1	4
Midpoint_Longitude_532	Float_32	deg	-180.0…180.0	1	4
Midpoint_Profile_ID_532	Int_32	NoUnits	TBD	1	4
Midpoint_Elapse_Time_532	Float_64	sec	0.0…3500.0	1	8
532_Constant_Parallel_Flag	Int_16	NoUnits	0…1	1	2
532_Constant_Parallel_Baseline	Float_32	km^3·sr·count	TBD	1	4
Std_Dev_532_Constant_Parallel_Baseline	Float_32	km^3·sr·count	TBD	1	4
Uncertainty_532_Constant_Parallel_Baseline	Float_32	km^3·sr·count	TBD	1	4
532_Smoothed_Constant_Parallel_Baseline	Float_32	km^3·sr·count	TBD	1	4
Std_Dev_532_Smoothed_Constant_Parallel_Baseline	Float_32	km^3·sr·count	TBD	1	4
Uncertainty_532_Smoothed_Constant_Parallel_Baseline	Float_32	km^3·sr·count	TBD	1	4
532_Constant_Parallel_Diag1	Float_32	km^3·sr·count	TBD	1	4
Std_Dev_532_Constant_Parallel_Diag1	Float_32	km^3·sr·count	TBD	1	4
Uncertainty_532_Constant_Parallel_Diag1	Float_32	km^3·sr·count	TBD	1	4
532_Smoothed_Constant_Parallel_Diag1	Float_32	km^3·sr·count	TBD	1	4
Std_Dev_532_Smoothed_Constant_Parallel_Diag1	Float_32	km^3·sr·count	TBD	1	4
Uncertainty_532_Smoothed_Constant_Parallel_Diag1	Float_32	km^3·sr·count	TBD	1	4
532_Constant_Parallel_Diag2	Float_32	km^3·sr·count	TBD	1	4
Std_Dev_532_Constant_Parallel_Diag2	Float_32	km^3·sr·count	TBD	1	4
Uncertainty_532_Constant_Parallel_Diag2	Float_32	km^3·sr·count	TBD	1	4
532_Smoothed_Constant_Parallel_Diag2	Float_32	km^3·sr·count	TBD	1	4
Std_Dev_532_Smoothed_Constant_Parallel_Diag2	Float_32	km^3·sr·count	TBD	1	4
Uncertainty_532_Smoothed_Constant_Parallel_Diag2	Float_32	km^3·sr·count	TBD	1	4
532_Constant_Parallel_Diag3	Float_32	km^3·sr·count	TBD	1	4
Std_Dev_532_Constant_Parallel_Diag3	Float_32	km^3·sr·count	TBD	1	4
Uncertainty_532_Constant_Parallel_Diag3	Float_32	km^3·sr·count	TBD	1	4
532_Smoothed_Constant_Parallel_Diag3	Float_32	km^3·sr·count	TBD	1	4
Std_Dev_532_Smoothed_Constant_Parallel_Diag3	Float_32	km^3·sr·count	TBD	1	4
Uncertainty_532_Smoothed_Constant_Parallel_Diag3	Float_32	km^3·sr·count	TBD	1	4
532_Constant_Parallel_Diag4	Float_32	km^3·sr·count	TBD	1	4
Std_Dev_532_Constant_Parallel_Diag4	Float_32	km^3·sr·count	TBD	1	4
Uncertainty_532_Constant_Parallel_Diag4	Float_32	km^3·sr·count	TBD	1	4
532_Smoothed_Constant_Parallel_Diag4	Float_32	km^3·sr·count	TBD	1	4
Std_Dev_532_Smoothed_Constant_Parallel_Diag4	Float_32	km^3·sr·count	TBD	1	4
Uncertainty_532_Smoothed_Constant_Parallel_Diag4	Float_32	km^3·sr·count	TBD	1	4
Total Bytes per Record					**158**

C) International Atomic Time (TAI) seconds from Jan. 1, 1993
D) TAI time converted to UTC time and stored in format: yymmdd.ffffffff

Table 57: Lidar 1064 Calibration Record (nighttime and daytime)

Parameter	Data Type	Units	Nominal Range	Elem/ Rec	Bytes
Midpoint_Profile_Time_1064[C]	Float_64	sec	N/A	1	8
Midpoint_Profile_UTC_Time_1064[D]	Float_64	NoUnits	N/A	1	8
Midpoint_Latitude_1064	Float_32	deg	-90.0…90.0	1	4
Midpoint_Longitude_1064	Float_32	deg	-180.0…180.0	1	4
Midpoint_Profile_ID_1064	Int_32	NoUnits	TBD	1	4
Max_532_Scattering_Ratio_1064Cal	Float_32	NoUnits	TBD	1	4
Min_532_Scattering_Ratio_1064Cal	Float_32	NoUnits	TBD	1	4
Mean_532_Scattering_Ratio_1064Cal	Float_32	NoUnits	TBD	1	4
Std_Dev_532_Scattering_Ratio_1064Cal	Float_32	NoUnits	TBD	1	4
Top_Index_of_Calibration_Region	Int_16	NoUnits	0…582	1	4
Base_Index_of_Calibration_Region	Int_16	NoUnits	0…582	1	4
1064_Calibration_Constant_Factor	Float_32	NoUnits	TBD	1	4
1064_Calibration_Constant	Float_32	$km^3 \cdot sr \cdot count$	TBD	1	4
Uncertainty_1064_Calibration_Constant	Float_32	$km^3 \cdot sr \cdot count$	TBD	1	4
Outlier_Rejection_Flag	Int_8	NoUnits	TBD	1	1
Day_Night_Flag	Int_8	NoUnits	TBD	1	1
Total Bytes per Record					**66**

C) International Atomic Time (TAI) seconds from Jan. 1, 1993
D) TAI time converted to UTC time and stored in format: yymmdd.ffffffff

Table 58: Lidar Daytime Segment Summary Record (One per orbit)

Parameter	Data Type	Units	Nominal Range	Elem/ Rec	Bytes
Starting_Time_Day[C]	Float_64	sec	N/A	1	8
Starting_Time_UTC_Day[D]	Float_64	NoUnits	N/A	1	8
Starting_Latitude_Day	Float_32	deg	-90.0…90.0	1	4
Starting_Longitude_Day	Float_32	deg	-180.0…180.0	1	4
Ending_Time_Day[C]	Float_64	sec	N/A	1	8
Ending_Time_UTC_Day[D]	Float_64	NoUnits	N/A	1	8
Ending_Latitude_Day	Float_32	deg	-90.0…90.0	1	4
Ending_Longitude_Day	Float_32	deg	-180.0…180.0	1	4
Mean_C1064_Day_Factor	Float_32	NoUnits	TBD	1	4
Mean_C1064_Day_with_no_OLR	Float_32	$km^3 \cdot sr \cdot count$	TBD	1	4
Std_Dev_C1064_Day_with_no_OLR	Float_32	$km^3 \cdot sr \cdot count$	TBD	1	4
Uncertainty_of _C1064_Day_with_no_OLR	Float_32	$km^3 \cdot sr \cdot count$	TBD	1	4
Number_of_Cloud_Profiles_Day_with_no_OLR	Int_16	NoUnits	TBD	1	4
Mean_C1064_Day_with_OLR	Float_32	$km^3 \cdot sr \cdot count$	TBD	1	4
Std_Dev_C1064_Day_with_OLR	Float_32	$km^3 \cdot sr \cdot count$	TBD	1	4
Uncertainty_of_C1064_Day_with_OLR	Float_32	$km^3 \cdot sr \cdot count$	TBD	1	4
Number_of_Cloud_Profiles_Day_with_OLR	Int_16	NoUnits	TBD	1	4
Total Bytes per Record					**84**

C) International Atomic Time (TAI) seconds from Jan. 1, 1993
D) TAI time converted to UTC time and stored in format: yymmdd.ffffffff

Table 59: Lidar Depolarization Gain Ratio Record

Parameter	Data Type	Units	Nominal Range	Elem/ Rec	Bytes
Starting_Time_PGR[C]	Float_64	sec	N/A	1	8
Starting_Time_UTC_PGR[D]	Float_64	NoUnits	N/A	1	8
Starting_Latitude_PGR	Float_32	deg	-90.0…90.0	1	4
Starting_Longitude_PGR	Float_32	deg	-180.0…180.0	1	4
Ending_Time_PGR[C]	Float_64	sec	N/A	1	8
Ending_Time_UTC_PGR[D]	Float_64	NoUnits	N/A	1	8
Ending_Latitude_PGR	Float_32	deg	-90.0…90.0	1	4
Ending_Longitude_PGR	Float_32	deg	-180.0…180.0	1	4
PGR_Calibration_Factor_Baseline	Float_32	N/A	0.0…2.0	1	4
Std_Dev_PGR_Baseline	Float_32	N/A	TBD	1	4
Uncertainty_PGR_Baseline	Float_32	N/A	TBD	1	4
Relative_Systematic_PGR_Error_Baseline	Float_32	N/A	TBD	1	4
PGR_Calibration_Factor_Diag1	Float_32	N/A	0.0…2.0	1	4
Std_Dev_PGR_Diag1	Float_32	N/A	TBD	1	4
Uncertainty_PGR_Diag1	Float_32	N/A	TBD	1	4
Relative_Systematic_PGR_Error_Diag1	Float_32	N/A	TBD	1	4
PGR_Calibration_Factor_Diag2	Float_32	N/A	0.0…2.0	1	4
Std_Dev_PGR_Diag2	Float_32	N/A	TBD	1	4
Uncertainty_PGR_Diag2	Float_32	N/A	TBD	1	4
Relative_Systematic_PGR_Error_Diag2	Float_32	N/A	TBD	1	4
PGR_Calibration_Factor_Diag3	Float_32	N/A	0.0…2.0	1	4
Std_Dev_PGR_Diag3	Float_32	N/A	TBD	1	4
Uncertainty_PGR_Diag3	Float_32	N/A	TBD	1	4
Relative_Systematic_PGR_Error_Diag3	Float_32	N/A	TBD	1	4
PGR_Baseline_Top_Altitude	Float_32	km	-1.845…39.855	1	4
PGR_Baseline_Base_Altitude	Float_32	km	-1.845…39.855	1	4
Upper_Altitude_PGR_Diag1	Float_32	km	-1.845…39.855	1	4
Lower_Altitude_PGR_Diag1	Float_32	km	-1.845…39.855	1	4
Upper_Altitude_PGR_Diag2	Float_32	km	-1.845…39.855	1	4
Lower_Altitude_PGR_Diag2	Float_32	km	-1.845…39.855	1	4
Upper_Altitude_PGR_Diag3	Float_32	km	-1.845…39.855	1	4
Lower_Altitude_PGR_Diag3	Float_32	km	-1.845…39.855	1	4
Total Bytes per Record					**144**

C) International Atomic Time (TAI) seconds from Jan. 1, 1993

D) TAI time converted to UTC time and stored in format: yymmdd.ffffffff

5.2 IIR Calibration

The IIR Calibration data product contains processed Space Look and Black Body images. The IIR Calibration data product is written in HDF. A summary of product contents is listed in Table 60.

The major categories of IIR calibration data are:

- Space Look
- Black Body

Level: N/A

Type: Engineering

Frequency: Orbit

Spatial Resolution Record:

64 x 64 pixels

Time Interval Covered

File: Orbit

Data File Name:

Table 60: CAL_IIR_L1_CAL -ProductionStrategy-Version.Instance.hdf

5.2.1 IIR Calibration Record Summary

Table 60: IIR Calibration Record Summary for one orbit

Record Name	Reference	Record Size	Recs/File	File Size (bytes)
Core Metadata Record	Appendix A	870	1	870
Archive Metadata Record	Appendix A	4	1	4
IIR Calibration Metadata Record	Table 61	555	1	555
IIR Space View Record	Table 62	24,664	583	14,379,112
IIR Black Body Record	Table 63	73,840	146	10,780,640
IIR Dead Pixel Image	Table 64	4,096	1	4,096
IIR Blind Pixel Image	Table 65	4,096	1	4,096
IIR Equalization Image	Table 66	8,228	1*	8,228
IIR Test Image	Table 67	49,268	1*	49,268
Earth Averaging Record	Table 68	49,156	2	98,312
Total Size (bytes)				**25,325,181**
Total Size (Mbytes)				**24.152**

***** The number of Equalization and Test images will vary based on how often the IIR instrument will be switched to the associated modes. The number one is used here as a reminder that these records could be included in the IIR Calibration file.

5.2.2 IIR Calibration Metadata

The IIR Calibration products include three Vdata record types (i.e., metadata) shown in the tables above. Listings for the core metadata and the archive metadata are provided in Appendix A. The metadata parameters specific to the IIR Calibration Product are listed in Table 61.

Table 61: IIR Calibration Metadata Record

Parameter	Data Type	Units	Nominal Range	Elem/ Rec	Bytes
Product_ID	Char	N/A	L1_IIR	80	80
Date_Time_at_Granule_Start[A]	Char	N/A	4/2006 – 6/2016	27	27
Date_Time_at_Granule_End[A]	Char	N/A	4/2006 – 6/2016	27	27
Date_Time_of_Production[A]	Char	N/A	4/2006 – 6/2016	27	27
Initial_Subsatellite_Latitude	Float_32	deg	-90.0…90.0	1	4
Initial_Subsatellite_Longitude	Float_32	deg	-180.0…180.0	1	4
Final_Subsatellite_Latitude	Float_32	deg	-90.0…90.0	1	4
Final_Subsatellite_Longitude	Float_32	deg	-180.0…180.0	1	4
Orbit_Number_at_Granule_Start	UInt_32	N/A	$1…2^{32}-1$	1	4
Orbit_Number_at_Granule_End	UInt_32	N/A	$1…2^{32}-1$	1	4
Orbit_Number_Change_Time[D]	Float_64	NoUnits	60,426.0…160,601.0	1	8
Path_Number_at_Granule_Start	Int_16	N/A	1…233	1	2
Path_Number_at_Granule_End	Int_16	N/A	1…233	1	2
Path_Number_Change_Time[D]	Float_64	NoUnits	60,426.0…160,601.0	1	8
Level_0_Files_Used	Char	N/A	2 file names max.	160	160
Level_1_code_version_used	Char	N/A		20	20
Input_parameter_File_version_number_used_Radiometry	UInt_16	N/A		1	2
Input_parameter_File_version_number_used_Geometry	UInt_16	N/A		1	2
Number_Blackbody_Records_8.65	Int_16	N/A	0…729	1	2
Number_Blackbody_Records_12.05	Int_16	N/A	0…729	1	2
Number_Blackbody_Records_10.6	Int_16	N/A	0…729	1	2
Number_BB_Images_Interpolated_Missing_8.65	Int_16	N/A	0…729	1	2
Number_BB_Images_Interpolated_Missing_12.05	Int_16	N/A	0…729	1	2
Number_BB_Images_Interpolated_Missing_10.6	Int_16	N/A	0…729	1	2
Number_of_Space_Look_Records_8.65	Int_16	N/A	0…729	1	2
Number_of_Space_Look_Records_12.05	Int_16	N/A	0…729	1	2
Number_of_Space_Look_Records_10.6	Int_16	N/A	0…729	1	2
Number_CS_Images_Interpolated_Missing_8.65	Int_16	N/A	0…729	1	2
Number_CS_Images_Interpolated_Missing_12.05	Int_16	N/A	0…729	1	2
Number_CS_Images_Interpolated_Missing_10.6	Int_16	N/A	0…729	1	2
Initial_Sequence_Number	Int_16	N/A	0…65,535	1	2
Final_Sequence_Number	Int_16	N/A	0…65,535	1	2
Percentage_of_Missing_Cycles	Float_32	%	0.0…100.0	1	4
Percentage_of_Missing_Sequences	Float_32	%	0.0…100.0	1	4
Percentage_of_Missing_Single_Images	Float_32	%	0.0…100.0	1	4
Number_Of_Equalization_Mode	Int_16	N/A	0…729	1	2
Blackbody_Temperature_Alert	Int_16	N/A	0/1	1	2
Cold_Space_Image_Alert	Int_16	N/A	0/1	1	2
Blind_Pixel_Alert	Int_16	N/A	0/1	1	2
Dead_Pixel_Alert	Int_16	N/A	0/1	1	2
Scale_Factor_for_Radiance	Float_32	N/A	0.0…TBD	1	4
Radiance_Offset	Float_32	N/A	0.0…TBD	1	4
IIR_L0_Filename_Processed	Char	N/A		80	80
Number_Single_Packets_Read	Int_32	N/A	0…2,187	1	4

Parameter	Data Type	Units	Nominal Range	Elem/ Rec	Bytes
Number_Sequences_Read	Int_32	N/A	0…729	1	4
Number_Cycles_Read	Int_32	N/A	0…146	1	4
File_Beginning_Time	Float_64	sec	TBD	1	8
File_End_Time	Float_64	sec	TBD	1	8
Record Size (bytes)					**555**

A) UTC CCSDS ASCII Time Code Format A
D) TAI time converted to UTC time and stored in format: yymmdd.ffffffff

5.2.3 IIR Calibration Scientific Data Sets

Table 62 through Table 68 summarizes the contents of each scientific data set (SDS) contained within the IIR Calibration products. Each parameter is listed using the same SDS name that is used in the respective HDF files. Units are given for each parameter, as is the range of valid data values. Parameters for which a valid range has not yet been established are listed as TBD (to be determined).

Table 62: IIR Space View Record

Parameter	Data Type	Units	Nominal Range	Elem/Rec	Bytes
SV_Cycle_Number	Int_16	N/A	0…65,535	1	2
SV_Sequence_Number	Int_16	N/A	0…65,535	1	2
SV_Image_Time_8.65[C]	Float_64	sec	0.0…TBD	1	8
SV_Image_UTC_Time_8.65[D]	Float_64	NoUnits	0.0…TBD	1	8
Space_View_Image_8.65	UInt_16	count	0…65,535	4,096	8,192
SV_Blackbody_Temp_8.65	Float_32	°C	-20.0…50.0	1	4
SV_Mean_of_all_Image_Pixels_8.65	Float_32	N/A	TBD	1	4
SV_Std_Dev_of_all_Image_Pixels_8.65	Float_32	N/A	TBD	1	4
SV_Image_Time_12.05[C]	Float_64	sec	0.0…TBD	1	8
SV_Image_UTC_Time_12.05[D]	Float_64	NoUnits	0.0…TBD	1	8
Space_View_Image_12.05	UInt_16	count	0…65,535	4,096	8,192
SV_Blackbody_Temp_12.05	Float_32	°C	-20.0…50.0	1	4
SV_Mean_of_all_Image_Pixels_12.05	Float_32	N/A	TBD	1	4
SV_Std_Dev_of_all_Image_Pixels_12.05	Float_32	N/A	TBD	1	4
SV_Image_Time_10.6[C]	Float_64	sec	0.0…TBD	1	8
SV_Image_UTC_Time_10.6[D]	Float_64	NoUnit	0.0…TBD	1	8
Space_View_Image_10.6	UInt_16	count	0…65,535	4,096	8,192
SV_Blackbody_Temp_10.6	Float_32	°C	-20.0…50.0	1	4
SV_Mean_of_all_Image_Pixels_10.6	Float_32	N/A	TBD	1	4
SV_Std_Dev_of_all_Image_Pixels_10.6	Float_32	N/A	TBD	1	4
Total Bytes per Record					**24,664**

C) International Atomic Time (TAI) seconds from Jan. 1, 1993
D) TAI time converted to UTC time and stored in format: yymmdd.ffffffff

Table 63: IIR Blackbody Record

Parameter/Field	Data Type	Units	Nominal Range	Elem/ Rec	Bytes
BB_Cycle_Number	Int_16	N/A	0…65,535	1	2
BB_Sequence_Number	Int_16	count	0…65,535	1	2
BB_Image_Time_8.65[C]	Float_64	sec	0.0…TBD	1	8
BB_Image_UTC_Time_8.65[D]	Float_64	NoUnits	0.0…TBD	1	8

Parameter/Field	Data Type	Units	Nominal Range	Elem/ Rec	Bytes
Blackbody_Image_8.65	UInt_16	count	0…65,535	4,096	8,192
BB_Blackbody_Temp_8.65	Float_32	°C	-20.0…50.0	1	4
BB_Mean_of_all_Image_Pixels_8.65	Float_32	N/A	TBD	1	4
BB_Std_Dev_of_all_Image_Pixels_8.65	Float_32	N/A	TBD	1	4
Gain_Image_8.65	Float_32	N/A	TBD	4,096	16,384
Mean_of_all_Gain_Image_Pixels_8.65	Float_32	N/A	TBD	1	4
Std_Dev_of_all_Gain_Image_Pixels_8.65	Float_32	N/A	TBD	1	4
BB_Image_Time_12.05[C]	Float_64	sec	TBD	1	8
BB_Image_Time_12.05[D]	Float_64	NoUnits	TBD	1	8
Blackbody_Image_12.05	UInt_16	count	0…65,535	4,096	8,192
BB_Blackbody_Temp_12.05	Float_32	°C	-20.0…50.0	1	4
BB_Mean_of_all_Image_Pixels_12.05	Float_32	N/A	TBD	1	4
BB_Std_Dev_of_all_Image_Pixels_12.05	Float_32	N/A	TBD	1	4
Gain_Image_12.05	Float_32	N/A	TBD	4,096	16,384
Mean_of_all_Gain_Image_Pixels_12.05	Float_32	N/A	TBD	1	4
Std_Dev_of_all_Gain_Image_Pixels_12.05	Float_32	N/A	TBD	1	4
BB_Image_Time_10.6[C]	Float_64	sec	TBD	1	8
BB_Image_Time_10.6[D]	Float_64	NoUnits	TBD	1	8
Blackbody_Image_10.6	UInt_16	count	0…65,535	4,096	8,192
BB_Blackbody_Temp_10.6	Float_32	°C	-20.0…50.0	1	4
BB_Mean_of_all_Image_Pixels_10.6	Float_32	N/A	TBD	1	4
BB_Std_Dev_of_all_Image_Pixels_10.6	Float_32	N/A	TBD	1	4
Gain_Image_10.6	Float_32	N/A	TBD	4,096	16,384
Mean_of_all_Gain_Image_Pixels_10.6	Float_32	N/A	TBD	1	4
Std_Dev_of_all_Gain_Image_Pixels_10.6	Float_32	N/A	TBD	1	4
Total Bytes per Record					**73,840**

C) International Atomic Time (TAI) seconds from Jan. 1, 1993
D) TAI time converted to UTC time and stored in format: yymmdd.ffffffff

Table 64: IIR Dead Pixel Image

Parameter	Data Type	Units	Nominal Range	Elem/Rec	Bytes
Dead_Pixels	Int_8	N/A	0…1	4,096	4,096
Record Size (bytes)					**4,096**

Table 65: IIR Blind Pixel Image

Parameter	Data Type	Units	Nominal Range	Elem/Rec	Bytes
Blind_Pixels	Int_8	N/A	0…1	4,096	4,096
Record Size (bytes)					**4,096**

Table 66: IIR Equalization Image

Parameter/Field	Data Type	Units	Nominal Range	Elem/Rec	Bytes
Equalization_Number	UInt_32	N/A	0…65,535	1	4
EQ_Cycle_Number	Int_16	N/A	0…65,535	1	2
EQ_Sequence_Number	Int_16	N/A	0…65,535	1	2
EQ_Image_Time[C]	Float_64	sec	0.0…TBD	1	8
EQ_Image_UTC_Time[D]	Float_64	NoUnits	0.0…TBD	1	8
EQ_Blackbody_Temp	Float_32	°C	TBD	1	4
EQ_Blackbody_Image	UInt_16	count	TBD	4,096	8,192
EQ_Mean_of_all_Image_Pixels	Float_32	N/A	TBD	1	4
EQ_Std_Dev_of_all_Image_Pixels	Float_32	N/A	TBD	1	4
Total Bytes per Record					**8,228**

C) International Atomic Time (TAI) seconds from Jan. 1, 1993
D) TAI time converted to UTC time and stored in format: yymmdd.ffffffff

Table 67: IIR Test Image

Parameter/Field	Data Type	Units	Nominal Range	Elem/Rec	Bytes
Test_Equalization_Number	UInt_32	N/A	0…65,535	1	4
Test_Cycle_Number	Int_16	N/A	0…65,535	1	2
Test_Sequence_Number	Int_16	N/A	0…65,535	1	2
Test_Calibration_Image_Time_8.65[C]	Float_64	sec	TBD	1	8
Test_Calibration_Image_UTC_Time_8.65[D]	Float_64	NoUnits	TBD	1	8
Test_Blackbody_Temp_8.65	Float_32	°C	TBD	1	4
Test_Calibration_Image_8.65	UInt_16	count	TBD	4,096	8,192
Test_Calibration_Image_Time_12.05[C]	Float_64	sec	TBD	1	8
Test_Calibration_Image_UTC_Time_12.05[D]	Float_64	NoUnits	TBD	1	8
Test_Blackbody_Temp_12.05	Float_32	°C	TBD	1	4
Test_Calibration_Image_12.05	UInt_16	count	TBD	4,096	8,192
Test_Calibration_Image_Time_10.6[C]	Float_64	sec	TBD	1	8
Test_Calibration_Image_UTC_Time_10.6[D]	Float_64	NoUnits	TBD	1	8
Test_Blackbody_Temp_10.6	Float_32	°C	TBD	1	4
Test_Calibration_Image_10.6	UInt_16	count	TBD	4,096	8,192
Test_Earth_Image_Time_8.65[C]	Float_64	sec	TBD	1	8
Test_Earth_Image_UTC_Time_8.65[D]	Float_64	NoUnits	TBD	1	8
Test_Earth_Image_8.65	UInt_16	count	TBD	4,096	8,192
Test_Earth_Image_Time_12.05[C]	Float_64	sec	TBD	1	8
Test_Earth_Image_UTC_Time_12.05[D]	Float_64	NoUnits	TBD	1	8
Test_Earth_Image_12.05	UInt_16	count	TBD	4,096	8,192
Test_Earth_Image_Time_10.6[C]	Float_64	sec	TBD	1	8
Test_Earth_Image_UTC_Time_10.6[D]	Float_64	NoData	TBD	1	8
Test_Earth_Image_10.6	UInt_16	count	TBD	4,096	8,192
Total Bytes per Record					**49,268**

C) International Atomic Time (TAI) seconds from Jan. 1, 1993
D) TAI time converted to UTC time and stored in format: yymmdd.ffffffff

Table 68: Earth Averaging Record (1 half per orbit)

Parameter	Data Type	Units	Nominal Range	Elem/ Rec	Bytes
Earth_Average_First_Cycle_Number	Int_16	N/A	0…4,092	1	2
Earth_Average_Last_Cycle_Number	Int_16	N/A	0…4,092	1	2
Earth_Average_Record_8.65	Float_32	$Wm^{-2}sr^{-1}\mu m^{-1}$	0.0…TBD	4,096	16,384
Earth_Average_Record_12.05	Float_32	$Wm^{-2}sr^{-1}\mu m^{-1}$	0.0…TBD	4,096	16,384
Earth_Average_Record_10.6	Float_32	$Wm^{-2}sr^{-1}\mu m^{-1}$	0.0…TBD	4,096	16,384
Record Size (bytes)					**49,156**

5.3 WFC Calibration

The WFC Calibration data product contains calibration results obtained from the dark frame data routinely acquired during the nighttime portions of the orbit. The data acquisition start and stop points on the orbit are defined by the solar elevation angle at the satellite. The Calibration data product is written in HDF. The summary of the product contents is listed in Table 69.

The major categories of WFC Calibration data are:

- Dark Scenes

Level: N/A

Type: Engineering

Frequency: Daily

Spatial Resolution Record:

1 km pixels x 61 km wide swath

125 m pixels x 5 km wide swath

Time Interval Covered:

File: 24 Hours

Data File Name:

Table 69: CAL_WFC_L1_CAL -ProductionStrategy-Version.Instance.hdf

5.3.1 WFC Calibration Data Product

Table 69: WFC Calibration Record Summary

Record Name	Reference	Record Size	Recs/File	File Size (bytes)
Core Metadata Record	Appendix A	870	1	870
Archive Metadata Record	Appendix A	4	1	4
WFC Calibration Metadata Record	Table 70	197	1	197
WFC Calibration Record	Table 71	2,656	2,475	6,573,600
WFC_Calibration_Statistics_Record	Table 75	6,096	15	91,440
Total Size (bytes)				**6,666,111**
Total Size (Mbytes)				**6.357**

5.3.2 WFC Calibration Metadata

The WFC Calibration product includes three Vdata record types (i.e., metadata) shown in the tables above. Listings for the core metadata and the archive metadata are provided in Appendix A. The metadata parameters specific to the WFC Calibration Products are listed in Table 70.

Table 70: WFC Calibration Metadata Record

Parameter	Data Type	Units	Nominal Range	Elem/Rec	Bytes
Product_ID	Char	NoUnits	WFC_Calibration	80	80
Date_Time_at_Granule_Start[A]	Char	NoUnits	4/2006 – 6/2016	27	27
Date_Time_at_Granule_End[A]	Char	NoUnits	4/2006 – 6/2016	27	27
Date_Time_of_Production[A]	Char	NoUnits	4/2006 – 6/2016	27	27
Orbit_Number_at_Granule_Start	UInt_32	N/A	$1\ldots2^{32}$-1	1	4
Orbit_Number_at_Granule_End	UInt_32	N/A	$1\ldots2^{32}$-1	1	4
Orbit_Number_Change_Time[D]	Float_64	NoUnits	60,426.0…160,601.0	1	8
Path_Number_at_Granule_Start	Int_16	N/A	1…233	1	2
Path_Number_at_Granule_End	Int_16	N/A	1…233	1	2
Path_Number_Change_Time[D]	Float_64	NoUnits	60,426.0…160,601.0	1	8
Frame_Time	Float_32	ms	N/A	1	4
Integration_Time	Float_32	ms	N/A	1	4
Record Size (bytes)					**197**

A) UTC CCSDS ASCII Time Code Format A
D) TAI time converted to UTC time and stored in format: yymmdd.ffffffff

5.3.3 WFC Calibration Scientific Data Sets

Table 71 and Table 72 summarize the contents of each scientific data set (SDS) contained within the WFC Calibration product. Each parameter is listed using the same SDS name that is used in the respective HDF files. Units are given for each parameter, as is the range of valid data values.

Table 71: WFC Calibration Record

Parameter	Data Type	Units	Nominal Range	Elem/Rec	Bytes
1Km_Row_Time[C]	Float_64	sec	0.0…1.0E9	1	8
1Km_Row_UTC_Time[D]	Float_64	NoUnits	0.0…1.0E9	1	8
125m_Row_Time[C]	Float_64	sec	0.0…1.0E9	8	64
125m_Row_UTC_Time[D]	Float_64	NoUnits	0.0…1.0E9	8	64
1Km_Latitude	Float_64	deg	-90.0...90.0	61	488
1Km_Longitude	Float_64	deg	-180.0…180.0	61	488
1Km_Pixel_Values	Float_32	count	0.0... 20000.0	61	244
125m_Pixel_Values	Float_32	count	0.0…20000.0	320	1,280
Col_Number_of_Center_Image_Pixel	UInt_16	NoUnits	244…268	1	2
Row_Number_of_Center_Image_Pixel	UInt_16	NoUnits	229…258	1	2
CCD_Temperature	Float_32	°C	-100.0…100.0	1	4
BasePlate_Temperature	Float_32	°C	-100.0…100.0	1	4
Total Bytes per Record					**2,656**

C) International Atomic Time (TAI) seconds from Jan. 1, 1993

D) TAI time converted to UTC time and stored in format: yymmdd.ffffffff

Table 72: WFC Calibration Statistic Record

Parameter	Data Type	Units	Nominal Range	Elem/Rec	Bytes
1Km_Pixel_Values_Mean	Float_32	count	0.0…20000.0	61	244
125m_Pixel_Values_Mean	Float_32	count	0.0…20000.0	320	1,280
1Km_Pixel_Values_St_Dev	Float_32	N/A	0.0…20000.0	61	244
125m_Pixel_Values_St_Dev	Float_32	N/A	0.0…20000.0	320	1,280
1Km_Pixel_Values_Max	Float_32	count	0.0…20000.0	61	244
125m_Pixel_Values_Max	Float_32	count	0.0…20000.0	320	1,280
1Km_Pixel_Values_Min	Float_32	count	0.0…20000.0	61	244
125m_Pixel_Values_Min	Float_32	count	0.0…20000.0	320	1,280
Total Bytes per Record					**6,096**

5.4 WFC Raw Data

The WFC Raw data product contains data when the Wide Field Camera is set to raw mode. The Raw data product is written in HDF. The summary of the product contents is listed in Table 73.

The major category of WFC Raw data is:

- WFC 125 m Earth View Data

Level: N/A

Type: Engineering

Frequency: N/A

Spatial Resolution Record:

125 m pixels x 61 km wide swath

Time Interval Covered:

File: 24 Hours

Data File Name:

Table 73: CAL_WFC_L1_CAL-ProductionStrategy-Version.Instance.hdf

5.4.1 WFC Raw Data Product

Table 73: WFC Raw Data Record Summary

Record Name	Reference	Record Size	Recs/File	File Size (bytes)
Core Metadata Record	Appendix A	870	1	870
Archive Metadata Record	Appendix A	4	1	4
WFC Raw Metadata Record	Table 74	197	1	197
WFC Raw Data Record	Table 75	8,814	1*	8,814
Total Size (bytes)				**9,885**
Total Size (Mbytes)				**0.009**

* **Note:** The size of WFC Raw Data records will vary based on the length of time the raw data mode switched on.

5.4.2 WFC Raw Data Metadata

The WFC Raw Data product includes three Vdata record types (i.e., metadata) shown in the tables above. Listings for the core metadata and the archive metadata are provided in Appendix A. The metadata parameters specific to the WFC Raw Data Product are listed in Table 74.

Table 74: WFC Raw Data Metadata Record

Parameter Name (Vdata)	Data Type	Units	Nominal Range	Elem/ Rec	Bytes
Product_ID	Char	NoUnits	WFC_Raw_Data	80	80
Date_Time_at_Granule_Start[A]	Char	NoUnits	4/2006 – 6/2016	27	27
Date_Time_at_Granule_End[A]	Char	NoUnits	4/2006 – 6/2016	27	27
Date_Time_of_Production[A]	Char	NoUnits	4/2006 – 6/2016	27	27
Orbit_Number_at_Granule_Start	UInt_32	N/A	1…2^{32}-1	1	4
Orbit_Number_at_Granule_End	UInt_32	N/A	1…2^{32}-1	1	4
Orbit_Number_Change_Time[D]	Float_64	NoUnits	60,426.0…160,601.0	1	8
Path_Number_at_Granule_Start	Int_16	N/A	1…233	1	2
Path_Number_at_Granule_End	Int_16	N/A	1…233	1	2
Path_Number_Change_Time[D]	Float_64	NoUnits	60,426.0…160,601.0	1	8
Frame_Time	Float_32	ms	N/A	1	4
Integration_Time	Float_32	ms	N/A	1	4
Record Size (bytes)					**197**

A) UTC CCSDS ASCII Time Code Format A
D) TAI time converted to UTC time and stored in format: yymmdd.ffffffff

5.4.3 WFC Raw Data Scientific Data Sets

Table 75 summarizes the contents of each scientific data set (SDS) contained within the WFC Raw Data product. Each parameter is listed using the same SDS name that is used in the respective HDF files. Units are given for each parameter, as is the range of valid data values.

Table 75: WFC Raw Data Record

Parameter	Data Type	Units	Nominal Range	Elem/ Rec	Bytes
Raw_Time[C]	Float_64	sec	0.0…1.0E9	1	8
Raw_UTC_Time[D]	Float_64	NoUnits	0.0…1.0E9	1	8
Dark_Current_Flag	UInt_16	NoUnits	0…1	1	2
Raw_Latitude	Float_64	deg	-90.0…90.0	488	3,904
Raw_Longitude	Float_64	deg	-180.0…180.0	488	3,904
Raw_Pixel_Values	UInt_16	count	0…20,000	488	976
Col_Number_of_Center_Image_Pixel	UInt_16	NoUnits	244…268	1	2
Row_Number_of_Center_Image_Pixel	UInt_16	NoUnits	229…258	1	2
CCD_Temperature	Float_32	°C	-100.0…100.0	1	4
BasePlate_Temperature	Float_32	°C	-100.0…100.0	1	4
Total Bytes per Record					**8,814**

C) International Atomic Time (TAI) seconds from Jan. 1, 1993
D) TAI time converted to UTC time and stored in format: yymmdd.ffffffff

Appendix A

CALIPSO Metadata

This section describes the metadata that are written to all CALIPSO HDF products. Table 76 describes the Core metadata record that is written to both the HDF and the ASCII file for the DAAC to be used to identify output science data products. Table 77 describes the Archive metadata record that is written to both a HDF and an ASCII file.

Table 76 and Table 77 lists the item number, parameter names, the units, range or allowable values, the data type and the maximum number of elem/record. The parameter data type is a string of x characters.

Table 76: Core Metadata Record Vdata

Item	Parameter Name	Data Type	Unit	Nominal Range	Max Number of Elements	Number of records	Bytes
1	GRANULEID	Char	NoUnits	N/A	80	1	80
2	GRANULENAME	Char	NoUnits	N/A	80	1	80
3	GRANULEVERSION	Char	NoUnits	N/A	80	1	80
4	DAYNIGHT	Char	NoUnits	“D” or “N”	1	1	1
5	BROWSE	Char	NoUnits	“Y” or “N”	1	1	1
6	METADATANAME	Char	NoUnits	N/A	80	1	80
7	PRODUCTIONDATETIME	Char	NoUnits	4/2006 – 6/2016	20	1	20
8	START_DATE	Char	NoUnits	4/2006 – 6/2016	27	1	27
9	STOP_DATE	Char	NoUnits	4/2006 – 6/2016	27	1	27
10	QAFLAG	Char	NoUnits	“Passed” or “Failed”	6	1	6
11	QAEXPLANATION	Char	NoUnits	N/A	80	1	80
12	MINLAT	Float_32	deg	-90.0…90.0	4	1	16
13	MINLON	Float_32	deg	-180.0…180.0	4	1	16
14	MAXLAT	Float_32	deg	-90.0…90.0	4	1	16
15	MAXLON	Float_32	deg	-180.0…180.0	4	1	16
16	GRINGLATITUDE	Float_64	N/A		21	1	162
17	GRINGLONGITUDE	Float_64	N/A		21	1	162
							870

Table 77: Archive Metadata Record Vdata

Item	Parameter Name	Data Type	Unit	Nominal Range	Max Number of Elements	Number of Records	Bytes
1	NUMBEROFRECORDS	Int_32	NoUnits	1…9,999,999,999	1	1	4
							4